MITSUBISHI ELECTRIC

Changes for the Better

SPLIT-TYPE, HEAT PUMP AIR CONDITIONERS

2018

R32/R410A

TECHNICAL & SERVICE MANUAL

Series SEZ Ceiling Concealed

Model name
<Indoor unit>

SEZ-M25DA(L)
SEZ-M35DA(L)
SEZ-M50DA(L)
SEZ-M60DA(L)
SEZ-M71DA(L)

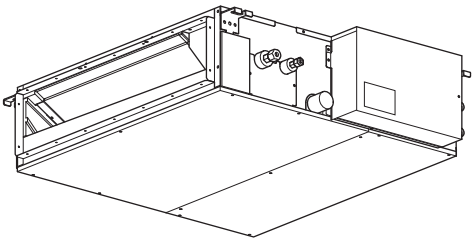

INDOOR UNIT

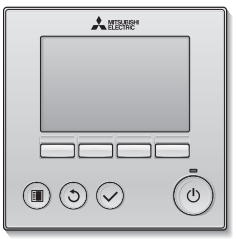

WIRED REMOTE CONTROLLER (optional) for DA type

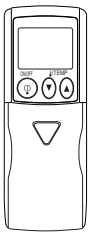

WIRELESS REMOTE CONTROLLER (supplied) for DAL type

Mr.SLIM™

CONTENTS

1. SAFETY PRECAUTION 2
2. PART NAMES AND FUNCTIONS 8
3. SPECIFICATIONS 13
4. OUTLINES AND DIMENSIONS 26
5. WIRING DIAGRAM 28
6. REFRIGERANT SYSTEM DIAGRAM 29
7. TROUBLESHOOTING 30
8. DISASSEMBLY PROCEDURE 42

1 SAFETY PRECAUTION

MEANINGS OF SYMBOLS DISPLAYED ON THE UNIT

	WARNING (Risk of fire)	This mark is for R32 refrigerant only. Refrigerant type is written on nameplate of outdoor unit. In case that refrigerant type is R32, this unit uses a flammable refrigerant. If refrigerant leaks and comes in contact with fire or heating part, it will create harmful gas and there is risk of fire.
	Read the OPERATION MANUAL carefully before operation.	
	Service personnel are required to carefully read the OPERATION MANUAL and INSTALLATION MANUAL before operation.	
	Further information is available in the OPERATION MANUAL, INSTALLATION MANUAL, and the like.	

1-1. ALWAYS OBSERVE FOR SAFETY

Before obtaining access to terminal, all supply circuits must be disconnected.

1-2. CAUTIONS RELATED TO NEW REFRIGERANT

Cautions for units utilizing refrigerant R32/R410A

Use new refrigerant pipes.

In case of using the existing pipes for R22, be careful with the following.
- Be sure to clean the pipes and make sure that the insides of the pipes are clean.
- Change flare nut to the one provided with this product. Use a newly flared pipe.
- Avoid using thin pipes.
- In case of reconnecting the refrigerant pipes after detaching, make the flared part of pipe re-fabricated.

Make sure that the inside and outside of refrigerant piping is clean and it has no contaminants such as sulfur, oxides, dirt, shaving particles, etc, which are hazard to refrigerant cycle.
In addition, use pipes with specified thickness.

Contamination inside refrigerant piping can cause deterioration of refrigerant oil, etc.

Store the piping indoors, and keep both ends of the piping sealed until just before brazing. (Leave elbow joints, etc. in their packaging.)

If dirt, dust or moisture enters into refrigerant cycle, that can cause deterioration of refrigerant oil or malfunction of compressor.

The refrigerant oil applied to flare and flange connections must be ester oil, ether oil or alkylbenzene oil in a small amount.

If large amount of mineral oil enters, that can cause deterioration of refrigerant oil, etc.

Charge refrigerant from liquid phase of gas cylinder.

If the refrigerant is charged from gas phase, composition change may occur in refrigerant and the efficiency will be lowered.

Use a vacuum pump with a reverse flow check valve.

Vacuum pump oil may flow back into refrigerant cycle and that can cause deterioration of refrigerant oil, etc.

Use the following tools specifically designed for use with R32/R410A refrigerant.

The following tools are necessary to use R32/R410A refrigerant.

Tools for R32/R410A	
Gauge manifold	Flare tool
Charge hose	Size adjustment gauge
Gas leak detector	Vacuum pump adaptor
Torque wrench	Electronic refrigerant charging scale

Handle tools with care.

If dirt, dust or moisture enters into refrigerant cycle, that can cause deterioration of refrigerant oil or malfunction of compressor.

Do not use a charging cylinder.

If a charging cylinder is used, the composition of refrigerant will change and the efficiency will be lowered.

Use the specified refrigerant only.

Never use any refrigerant other than that specified.
Doing so may cause a burst, an explosion, or fire when the unit is being used, serviced, or disposed of.
Correct refrigerant is specified on name plate of outdoor unit.
If other refrigerant (R22, etc.) is used, chlorine in refrigerant can cause deterioration of refrigerant oil, etc.
We will not be held responsible for mechanical failure, system malfunction, unit breakdown or accidents caused by failure to follow the instructions.

Ventilate the room if refrigerant leaks during operation. If refrigerant comes into contact with a flame, poisonous gases will be released.

[1] Warning for service

(1) Do not alter the unit.
(2) For installation and relocation work, follow the instructions in the Installation Manual and use tools and pipe components specifically made for use with refrigerant specified in the outdoor unit installation manual.
(3) Ask a dealer or an authorized technician to install, relocate and repair the unit.
(4) This unit should be installed in rooms which exceed the floor space specified in outdoor unit installation manual. Refer to outdoor unit installation manual.
(5) Install the indoor unit at least 2.5 m above floor or grade level.
For appliances not accessible to the general public.
(6) Refrigerant pipes connection shall be accessible for maintenance purposes.
(7) If the air conditioner is installed in a small room or closed room, measures must be taken to prevent the refrigerant concentration in the room from exceeding the safety limit in the event of refrigerant leakage. Should the refrigerant leak and cause the concentration limit to be exceeded, hazards due to lack of oxygen in the room may result.
(8) Keep gas-burning appliances, electric heaters, and other fire sources (ignition sources) away from the location where installation, repair, and other air conditioner work will be performed.
If refrigerant comes into contact with a flame, poisonous gases will be released.
(9) When installing or relocating, or servicing the air conditioner, use only the specified refrigerant written on outdoor unit to charge the refrigerant lines.
Do not mix it with any other refrigerant and do not allow air to remain in the lines.
If air is mixed with the refrigerant, then it can be the cause of abnormal high pressure in the refrigerant line, and may result in an explosion and other hazards.
(10) After installation has been completed, check for refrigerant leaks. If refrigerant leaks into the room and comes into contact with the flame of a heater or portable cooking range, poisonous gases will be released.
(11) Do not use low temperature solder alloy in case of brazing the refrigerant pipes.
(12) When performing brazing work, be sure to ventilate the room sufficiently. Make sure that there are no hazardous or flammable materials nearby.
When performing the work in a closed room, small room, or similar location, make sure that there are no refrigerant leaks before performing the work.
If refrigerant leaks and accumulates, it may ignite or poisonous gases may be released.
(13) Do not install the unit in places where refrigerant may build-up or places with poor ventilation such as a semi-basement or a sunken place in outdoor: Refrigerant is heavier than air, and inclined to fall away from the leak source.
(14) Do not use means to accelerate the defrosting process or to clean, other than those recommended by the manufacturer.
(15) The appliance shall be stored in a room without continuously operating ignition sources (for example: open flames, an operating gas appliance or an operating electric heater).
(16) Do not pierce or burn.
(17) Be aware that refrigerants may not contain an odour.
(18) Pipe-work shall be protected from physical damage.
(19) The installation of pipe-work shall be kept to a minimum.
(20) Compliance with national gas regulations shall be observed.
(21) Keep any required ventilation openings clear of obstruction.
(22) Servicing shall be performed only as recommended by the manufacturer.
(23) The appliance shall be stored in a well-ventilated area where the room size corresponds to the room area as specified for operation.
(24) Maintenane, service and repair operations shall be performed by authorized technician with required qualification.

[2] Cautions for service

(1) Perform service after recovering the refrigerant left in unit completely.
(2) Do not release refrigerant in the air.
(3) After completing service, charge the cycle with specified amount of refrigerant.
(4) When performing service, install a filter drier simultaneously.
Be sure to use a filter drier for new refrigerant.

[3] Additional refrigerant charge

When charging directly from cylinder
(1) Check that cylinder for R32/R410A available on the market is a syphon type.
(2) Charging should be performed with the cylinder of syphon stood vertically. (Refrigerant is charged from liquid phase.)

[4] Cautions for unit using R32 refrigerant

Basic work procedures are the same as those for conventional units using refrigerant R410A. However, pay careful attention to the following points.

(1) Information on servicing

(1-1) Checks on the Area

Prior to beginning work on systems containing flammable refrigerants, safety checks are necessary to ensure that the risk of ignition is minimized.

For repair to the refrigeranting systems, (1-3) to (1-7) shall be completed prior to conducting work on the systems.

(1-2) Work Procedure

Work shall be undertaken under a controlled procedure so as to minimize the risk of a flammable gas or vapor being present while the work is being performed.

(1-3) General Work Area

All maintenance staff and others working in the local area shall be instructed on the nature of work being carried out. Work in confined spaces shall be avoided. The area around the workspace shall be sectioned off. Ensure that the conditions within the area have been made safe by control of flammable material.

(1-4) Checking for Presence of Refrigerant

The area shall be checked with an appropriate refrigerant detector prior to and during work, to ensure the technician is aware of potentially toxic or flammable atmospheres. Ensure that the leak detection equipment being used is suitable for use with all applicable refrigerants, i.e. non-sparking, adequately sealed or intrinsically safe.

(1-5) Presence of Fire Extinguisher

If any hot work is to be conducted on the refrigeration equipment or any associated parts, appropriate fire extinguishing equipment shall be available to hand.

Have a dry powder or CO2 fire extinguisher adjacent to the charging area.

(1-6) No Ignition Sources

No person carrying out work in relation to a refrigeration system which involves exposing any pipe work shall use any sources of ignition in such a manner that it may lead to the risk of fire or explosion. All possible ignition sources, including cigarette smoking, should be kept sufficiently far away from the site of installation, repairing, removing and disposal, during which refrigerant can possibly be released to the surrounding space. Prior to work taking place, the area around the equipment is to be surveyed to make sure that there are no flammable hazards or ignition risks. “No Smoking” signs shall be displayed.

(1-7) Ventilated Area

Ensure that the area is in the open or that it is adequately ventilated before breaking into the system or conducting any hot work. A degree of ventilation shall continue during the period that the work is carried out. The ventilation should safely disperse any released refrigerant and preferably expel it externally into the atmosphere.

(1-8) Checks on the Refrigerantion Equipment

Where electrical components are being changed, they shall be fit for the purpose and to the correct specification. At all times the manufacturer’s maintenance and service guidelines shall be followed. If in doubt, consult the manufacturer’s technical department for assistance.

The following checks shall be applied to installations using flammable refrigerants:

- The charge size is in accordance with the room size within which the refrigerant containing parts are installed.
- The ventilation machinery and outlets are operating adequately and are not obstructed.
- Marking to the equipment continues to be visible and legible. Markings and signs that are illegible shall be corrected.
- Refrigeration pipe or components are installed in a position where they are unlikely to be exposed to any substance which may corrode refrigerant containing components, unless the components are constructed of materials which are inherently resistant to being corroded or are suitably protected against being corroded.

(1-9) Checks on Electrical Devices

Repair and maintenance to electrical components shall include initial safety checks and component inspection procedures. If a fault exists that could compromise safety, then no electrical supply shall be connected to the circuit until it is satisfactorily dealt with. If the fault cannot be corrected immediately but it is necessary to continue operation, an adequate temporary solution shall be used. This shall be reported to the owner of the equipment so all parties are advised.

Initial safety checks shall include that:

- capacitors are discharged: this shall be done in a safe manner to avoid possibility of sparking;
- no live electrical components and wiring are exposed while charging, recovering or purging the system;
- there is continuity of earth bonding

(2) Repairs to Sealed Components

(2-1) During repairs to sealed components, all electrical supplies shall be disconnected from the equipment being worked upon prior to any removal of sealed covers, etc. If it is absolutely necessary to have an electrical supply to equipment during servicing, then a permanently operating form of leak detection shall be located at the most critical point to warn of a potentially hazardous situation.

(2-2) Particular attention shall be paid to the following to ensure that by working on electrical components, the casing is not altered in such a way that the level of protection is affected. This shall include damage to cables, excessive number of connections, terminals not made to original specification, damage to seals, incorrect fitting of glands, etc.

Ensure that the apparatus is mounted securely.

Ensure that seals or sealing materials have not degraded to the point that they no longer serve the purpose of preventing the ingress of flammable atmospheres.

Replacement parts shall be in accordance with the manufacturer’s specifications.

(3) Repair to intrinsically Safe Components
Do not apply any permanent inductive or capacitance loads to the circuit without ensuring that this will not exceed the permissible voltage and current permitted for the equipment in use.
Intrinsically safe components are the only types that can be worked on while live in the presence of a flammable atmosphere. The test apparatus shall be at the correct rating.
Replace components only with parts specified by the manufacturer. Other parts may result in the ignition of refrigerant in the atmosphere from a leak.

(4) Cabling
Check that cabling will not be subject to wear, corrosion, excessive pressure, vibration, sharp edges or any other adverse environmental effects. The check shall also take into account the effects of aging or continual vibration from sources such as compressors or fans.

(5) Detection of Flammable Refrigerants
Under no circumstances shall potential sources of ignition be used in the searching for or detection of refrigerant leaks.
A halide torch (or any other detector using a naked flame) shall not be used.

(6) Leak Detection Methods
Electronic leak detectors may be used to detect refrigerant leaks but, in the case of flammable refrigerants, the sensitivity may not be adequate, or may need re-calibration. (Detection equipment shall be calibrated in a refrigerant-free area.)
Ensure that the detector is not a potential source of ignition and is suitable for the refrigerant used. Leak detection equipment shall be set at a percentage of the LFL of the refrigerant and shall be calibrated to the refrigerant employed, and the appropriate percentage of gas (25% maximum) is confirmed.
Leak detection fluids are suitable for use with most refrigerants but the use of detergents containing chlorine shall be avoided as the chlorine may react with the refrigerant and corrode the copper pipe-work.
If a leak is suspected, all naked flames shall be removed/extinguished.
If a leakage of refrigerant is found which requires brazing, all of the refrigerant shall be recovered from the system, or isolated (by means of shut off valves) in a part of the system remote from the leak. For appliances containing flammable refrigerants, oxygen free nitrogen (OFN) shall then be purged through the system both before and during the brazing process.

(7) Removal and Evacuation
When breaking into the refrigerant circuit to make repairs – or for any other purpose conventional procedures shall be used. However, for flammable refrigerants it is important that best practice is followed since flammability is a consideration. The following procedure shall be adhered to:
- remove refrigerant
- purge the circuit with inert gas
- evacuate
- purge again with inert gas
- open the circuit by cutting or brazing.

The refrigerant charge shall be recovered into the correct recovery cylinders. For appliances containing flammable refrigerants, the system shall be “flushed” with OFN to render the unit safe. This process may need to be repeated several times.
Compressed air or oxygen shall not be used for purging refrigerant systems.
For appliances containing flammable refrigerants, flushing shall be achieved by breaking the vacuum in the system with OFN and continuing to fill until the working pressure is achieved, then venting to atmosphere, and finally pulling down to a vacuum. This process shall be repeated until no refrigerant is within the system. When the final OFN charge is used, the system shall be vented down to atmospheric pressure to enable work to take place. This operation is absolutely vital if brazing operations on the pipe-work are to take place.
Ensure that the outlet for the vacuum pump is not close to any ignition sources and that ventilation is available.

(8) Charging Procedures
In addition to conventional charging procedures, the following requirements shall be followed:
- Ensure that contamination of different refrigerants does not occur when using charging equipment. Hoses or lines shall be as short as possible to minimize the amount of refrigerant contained in them.
- Cylinders shall be kept upright.
- Ensure that the refrigeration system is earthed prior to charging the system with refrigerant.
- Label the system when charging is complete (if not already).
- Extreme care shall be taken not to overfill the refrigeration system.

Prior to recharging the system, it shall be pressure-tested with the appropriate purging gas. The system shall be leak-tested on completion of charging but prior to commissioning. A follow up leak test shall be carried out prior to leaving the site.

(9) Decommissioning
Before carrying out this procedure, it is essential that the technician is completely familiar with the equipment and all its detail. It is recommended good practice that all refrigerants are recovered safely. Prior to the task being carried out, an oil and refrigerant sample shall be taken in case analysis is required prior to re-use of reclaimed refrigerant. It is essential that electrical power is available before the task is commenced.
a)Become familiar with the equipment and its operation.

Continued to the next page

b)Isolate system electrically.
c)Before attempting the procedure, ensure that:
· mechanical handling equipment is available, if required, for handling refrigerant cylinders;
· all personal protective equipment is available and being used correctly;
· the recovery process is supervised at all times by a competent person;
· recovery equipment and cylinders conform to the appropriate standards.
d)Pump down refrigerant system, if possible.
e)If a vacuum is not possible, make a manifold so that refrigerant can be removed from various parts of the system.
f) Make sure that cylinder is situated on the scales before recovery takes place.
g)Start the recovery machine and operate in accordance with manufacturer's instructions.
h)Do not overfill cylinders. (No more than 80 % volume liquid charge).
i) Do not exceed the maximum working pressure of the cylinder, even temporarily.
j) When the cylinders have been filled correctly and the process completed, make sure that the cylinders and the equipment are removed from site promptly and all isolation valves on the equipment are closed off.
k)Recovered refrigerant shall not be charged into another refrigeration system unless it has been cleaned and checked.

(10) Labelling
Equipment shall be labelled stating that it has been de-commissioned and emptied of refrigerant. The label shall be dated and signed. For appliances containing flammable refrigerants, ensure that there are labels on the equipment stating the equipment contains flammable refrigerant.

(11) Recovery
When removing refrigerant from a system, either for servicing or decommissioning, it is recommended good practice that all refrigerants are removed safely. When transferring refrigerant into cylinders, ensure that only appropriate refrigerant recovery cylinders are employed. Ensure that the correct number of cylinders for holding the total system charge are available. All cylinders to be used are designated for the recovered refrigerant and labelled for that refrigerant (i.e. special cylinders for the recovery of refrigerant). Cylinders shall be complete with pressure-relief valve and associated shut-off valves in good working order. Empty recovery cylinders are evacuated and, if possible, cooled before recovery occurs.
The recovery equipment shall be in good working order with a set of instructions concerning the equipment that is at hand and shall be suitable for the recovery of all appropriate refrigerants including, when applicable, flammable refrigerants. In addition, a set of calibrated weighing scales shall be available and in good working order. Hoses shall be complete with leak-free disconnect couplings and in good condition. Before using the recovery machine, check that it is in satisfactory working order, has been properly maintained and that any associated electrical components are sealed to prevent ignition in the event of a refrigerant release. Consult manufacturer if in doubt.
The recovered refrigerant shall be returned to the refrigerant supplier in the correct recovery cylinder, and the relevant waste transfer note arranged. Do not mix refrigerants in recovery units and especially not in cylinders. If compressors or compressor oils are to be removed, ensure that they have been evacuated to an acceptable level to make certain that flammable refrigerant does not remain within the lubricant. The evacuation process shall be carried out prior to returning the compressor to the suppliers. Only electric heating to the compressor body shall be employed to accelerate this process. When oil is drained from a system, it shall be carried out safely.

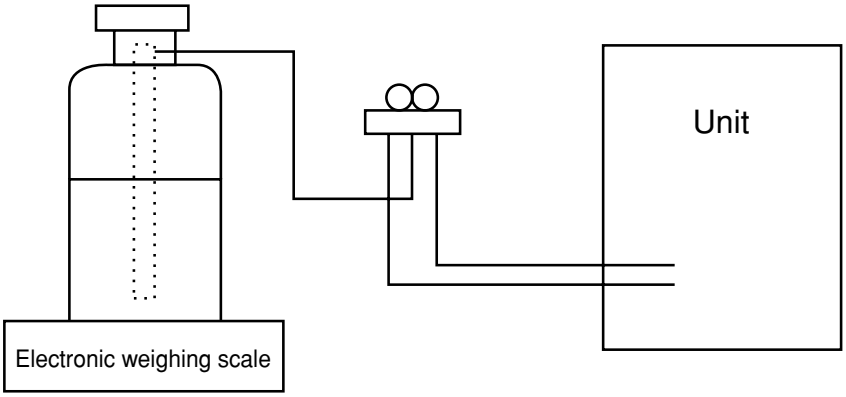

[5] Service tools

Use the below service tools as exclusive tools for R32/R410A refrigerant.
Refer to the spec name plate on outdoor unit for the type of refrigerant being used.

No.	Tool name	Specifications
1.	Gauge manifold	· Use the existing fitting specifications. (UNF1/2)
		· Use high-tension side pressure of 5.3MPa·G or over.
2.	Charge hose	· Use pressure performance of 5.09MPa·G or over.
3.	Electronic weighing scale	—
4.	Gas leak detector	· Use the detector for R134a, R407, R410A, or R32.
5.	Adaptor for reverse flow check	· Attach on vacuum pump.
6.	Refrigerant charge base	—
7.	Refrigerant cylinder	· R32 or R410A refrigerant · Cylinder with syphon
8.	Refrigerant recovery equipment	—

2 PART NAMES AND FUNCTIONS

Indoor Unit
SEZ-M25DA(L)
SEZ-M35DA(L)
SEZ-M50DA(L)
SEZ-M60DA(L)
SEZ-M71DA(L)

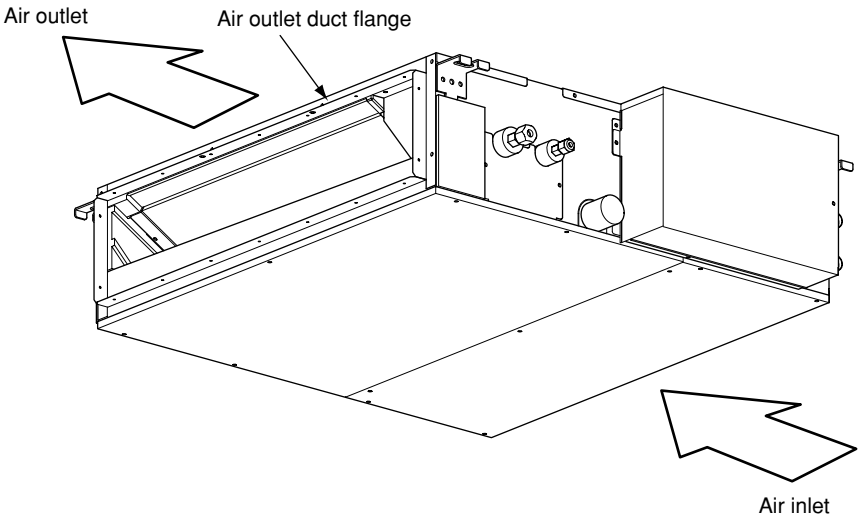

• Wired remote controller (Option) PAR-33MAA

The functions which can be used are restricted according to each model.

Display

The main display can be displayed in 2 different modes: "Full" and "Basic."
The initial setting is "Full."

Full mode

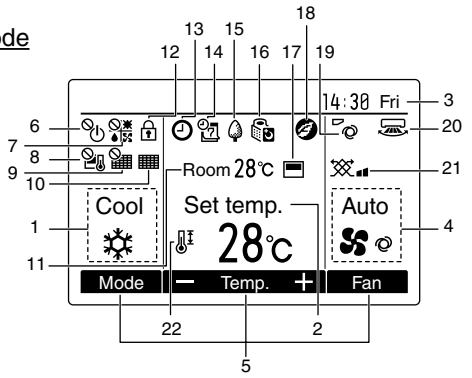

Basic mode

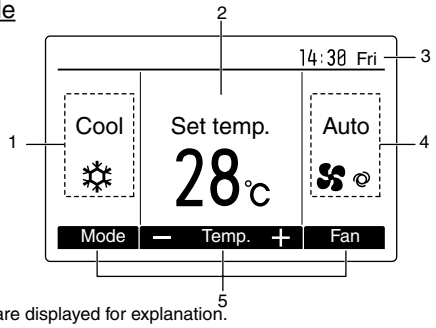

Note: All icons are displayed for explanation.

1 Operation mode
Indoor unit operation mode appears here.

2 Preset temperature
Preset temperature appears here.

3 Clock (See the Installation Manual.)
Current time appears here.

4 Fan speed
Fan speed setting appears here.

5 Button function guide
Functions of the corresponding buttons appear here.

6
Appears when the ON/OFF operation is centrally controlled.

7
Appears when the operation mode is centrally controlled.

8
Appears when the preset temperature is centrally controlled.

9
Appears when the filter reset function is centrally controlled.

10
Indicates when filter needs maintenance.

11 Room temperature (See the Installation Manual.)
Current room temperature appears here.

12
Appears when the buttons are locked.

13
Appears when the On/Off timer or Night setback function is enabled.

14
Appears when the Weekly timer is enabled.

15
Appears while the units are operated in the energy-save mode.

16
Appears while the outdoor units are operated in the silent mode.

17
Appears when the built-in thermistor on the remote controller is activated to monitor the room temperature.
appears when the thermistor on the indoor unit is activated to monitor the room temperature.

18
Appears when the units are operated in the energy-save mode with 3D i-see Sensor.

19
Indicates the vane setting.

20
Indicates the louver setting.

21
Indicates the ventilation setting.

22
Appears when the preset temperature range is restricted.

Controller interface

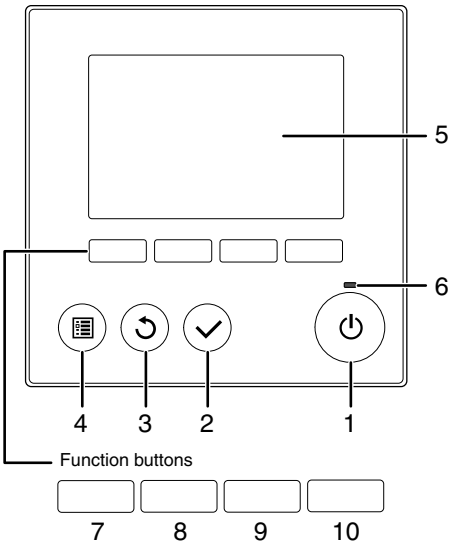

- When the backlight is off, pressing any button turns the backlight on and does not perform its function. (except for the ON/OFF button)
- Most settings (except ON/OFF, mode, fan speed, temperature) can be made from the Menu screen.

1 ON/OFF button
Press to turn ON/OFF the indoor unit.

2 SELECT button
Press to save the setting.

3 RETURN button
Press to return to the previous screen.

4 MENU button
Press to bring up the Main menu.

5 Backlit LCD
Operation settings will appear.
When the backlight is off, pressing any button turns the backlight on and it will stay lit for a certain period of time depending on the screen.

6 ON/OFF lamp
This lamp lights up in green while the unit is in operation. It blinks while the remote controller is starting up or when there is an error.

The functions of the function buttons change depending on the screen. Refer to the button function guide that appears at the bottom of the LCD for the functions they serve on a given screen.
When the system is centrally controlled, the button function guide that corresponds to the locked button will not appear.

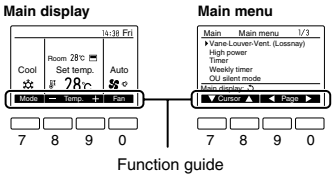

Function guide

7 Function button F1
Main display: Press to change the operation mode.
Main menu: Press to move the cursor down.

8 Function button F2
Main display: Press to decrease temperature.
Main menu: Press to move the cursor up.

9 Function button F3
Main display: Press to increase temperature.
Main menu: Press to go to the previous page.

10 Function button F4
Main display: Press to change the fan speed.
Main menu: Press to go to the next page.

Menu structure

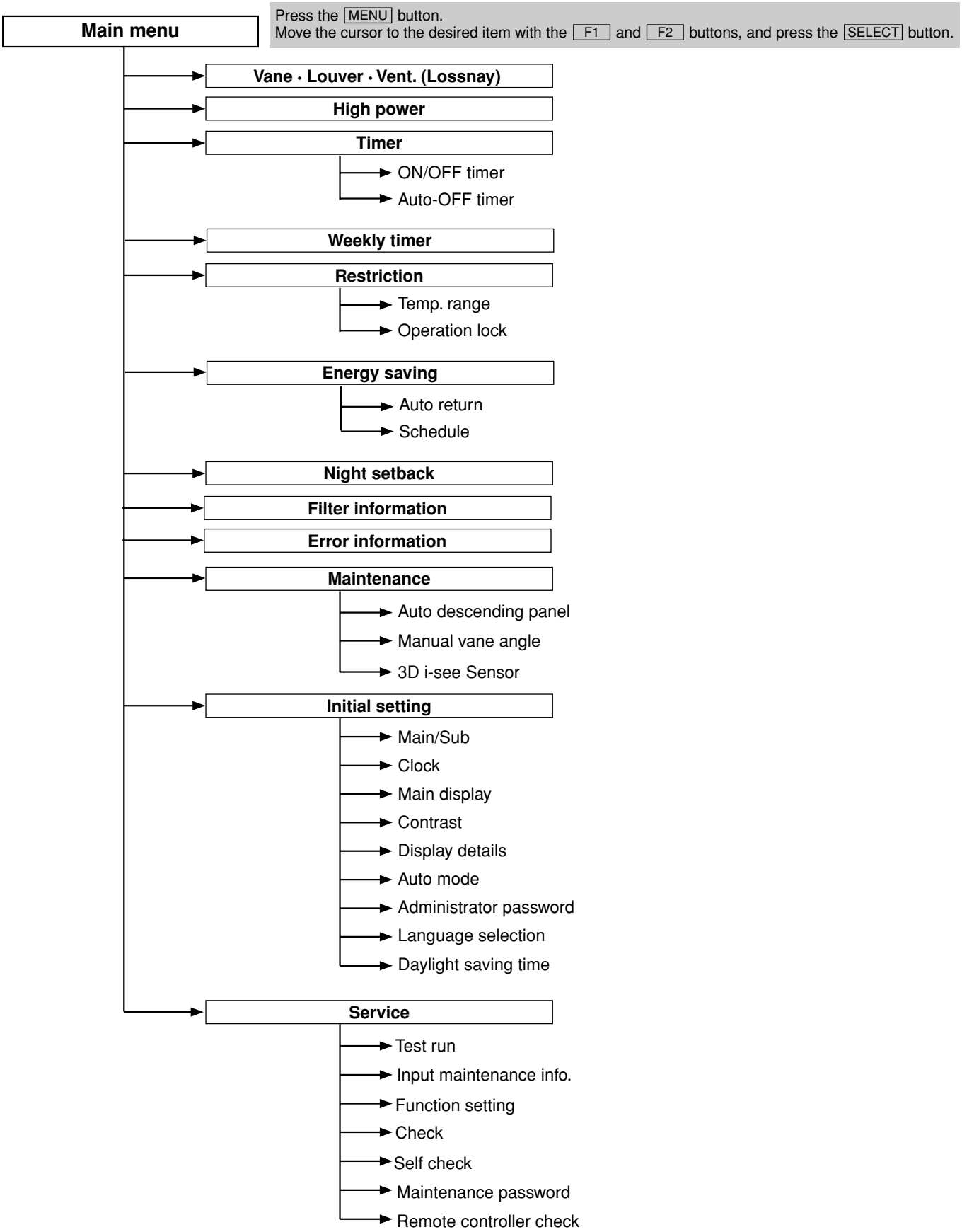

Not all functions are available on all models of indoor units.

Setting and display items		Setting details
Vane · Louver · Vent. (Lossnay)		**Use to set the vane angle.** • Select a desired vane setting from 5 different settings. **Use to turn ON/OFF the louver.** • Select a desired setting from "ON" and "OFF." **Use to set the amount of ventilation.** • Select a desired setting from "OFF," "Low," and "High."
High power		**Use to reach the comfortable room temperature quickly.** • Units can be operated in the High-power mode for up to 30 minutes.
Timer	**ON/OFF timer***	**Use to set the operation ON/OFF times.** • Time can be set in 5-minute increments.
	Auto-Off timer	**Use to set the Auto-OFF time.** • Time can be set to a value from 30 to 240 in 10-minute increments.
Filter information		**Use to check the filter status.** • The filter sign can be reset.
Error information		**Use to check error information when an error occurs.** • Check code, error source, refrigerant address, unit model, manufacturing number, contact information (dealer's phone number) can be displayed. (The unit model, manufacturing number, and contact information need to be registered in advance to be displayed.)
Weekly timer*		**Use to set the weekly operation ON/OFF times.** • Up to 8 operation patterns can be set for each day. (Not valid when the ON/OFF timer is enabled.)
Energy saving	**Auto return**	**Use to get the units to operate at the preset temperature after performing energy-save operation for a specified time period.** • Time can be set to a value from 30 and 120 in 10-minute increments. (This function will not be valid when the preset temperature ranges are restricted.)
	Schedule*	**Set the start/stop times to operate the units in the energy-save mode for each day of the week, and set the energy-saving rate.** • Up to 4 energy-save operation patterns can be set for each day. • Time can be set in 5-minute increments. • Energy-saving rate can be set to a value from 0% and 50 to 90% in 10% increments.
Night setback*		**Use to make Night setback settings.** • Select "Yes" to enable the setting, and "No" to disable the setting. The temperature range and the start/stop times can be set.
Restriction	**Temp. range**	**Use to restrict the preset temperature range.** • Different temperature ranges can be set for different operation modes.
	Operation lock	**Use to lock selected functions.** • The locked functions cannot be operated.
Initial setting	**Main/Sub**	**When connecting 2 remote controllers, one of them needs to be designated as a sub controller.**
	Clock	**Use to set the current time.**
	Main display	**Use to switch between "Full" and "Basic" modes for the Main display.** • The initial setting is "Full."
	Contrast	**Use to adjust screen contrast.**
	Daylight saving time	**Sets the daylight saving time.**
Initial setting	**Display details**	**Make the settings for the remote controller related items as necessary.** **Clock:** The initial settings are "Yes" and "24h" format. **Temperature:** Set either Celsius (˚C) or Fahrenheit (˚F). **Room temp. :** Set Show or Hide. **Auto mode:** Set the Auto mode display or Only Auto display.
	Auto mode	**Whether or not to use the AUTO mode can be selected by using the button.** **This setting is valid only when indoor units with the AUTO mode function are connected.**
	Administrator pass-word	**The administrator password is required to make the settings for the following items.** • Timer setting • Energy-save setting • Weekly timer setting • Restriction setting • Outdoor unit silent mode setting • Night set back
	Language selection	**Use to select the desired language.**
Service	**Test run**	**Select "Test run" from the Service menu to bring up the Test run menu.** • Test run • Drain pump test run
	Input maintenance	**Select "Input maintenance Info." from the Service menu to bring up the Maintenance information screen.** **The following settings can be made from the Maintenance Information screen.** • Model name input • Serial No. input • Dealer information input
	Function setting	**Make the settings for the indoor unit functions via the remote controller as necessary.**
	LOSSNAY setting (City Multi only)	**This setting is required only when the operation of City Multi units is interlocked with LOSSNAY units.**
	Check	**Error history:** Display the error history and execute "delete error history". **Refrigerant leak check:** Refrigerant leaks can be judged. **Smooth maintenance:** The indoor and outdoor maintenance data can be displayed. **Request code:** Details of the operation data including each thermistor temperature and error history can be checked.
	Self check	**Error history of each unit can be checked via the remote controller.**
	Maintenance password	**Use to change the maintenance password.**
	Remote controller check	**When the remote controller does not work properly, use the remote controller checking function to trouble-shoot the problem.**

* Clock setting is required.

Wireless remote controller

● Operation buttons

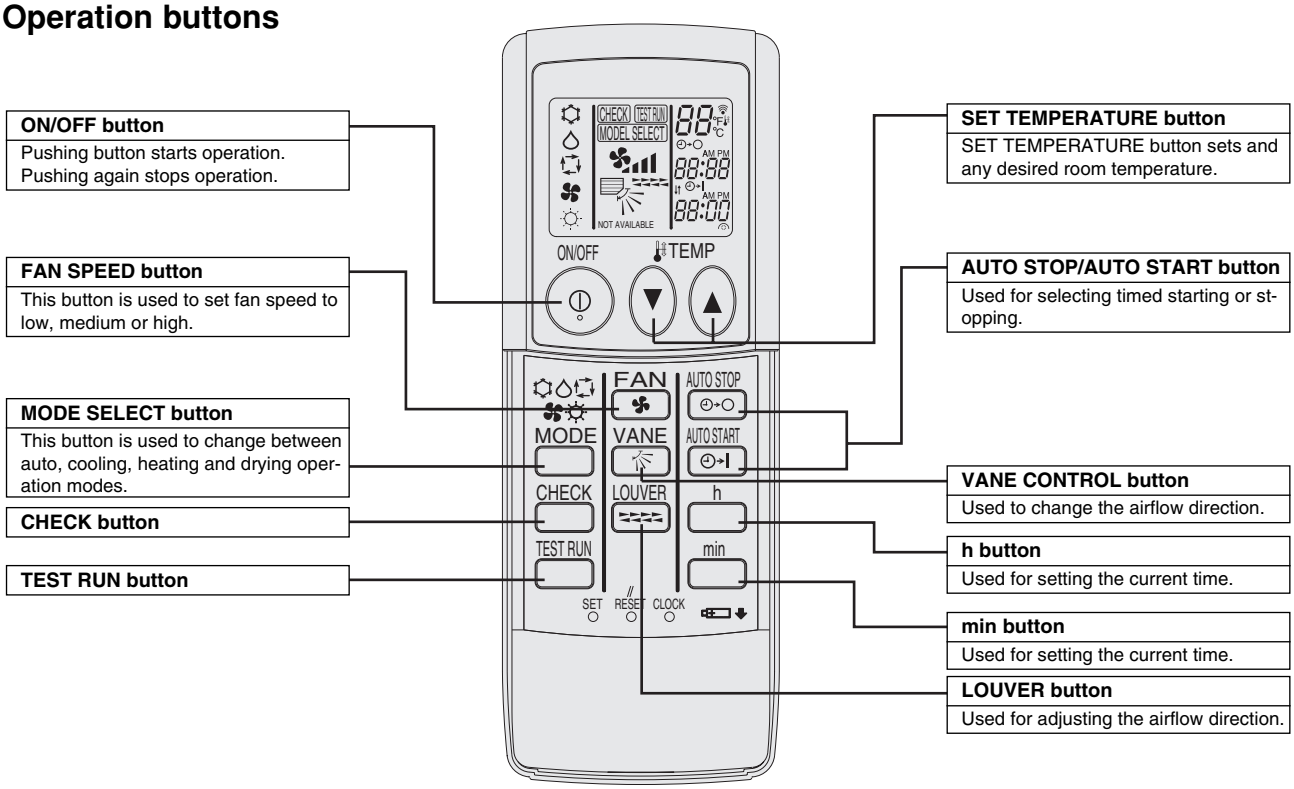

- When using the wireless remote controller, point it towards the receiver on the indoor unit.
- If the remote controller is operated within approximately two minutes after power is supplied to the indoor unit, the indoor unit may beep twice as the unit is performing the initial automatic check.
- The indoor unit beeps to confirm that the signal transmitted from the remote controller has been received. Signals can be received up to approximately 7 meters in a direct line from the indoor unit in an area 45° to the left and right of the unit. However, illumination such as fluorescent lights and strong light can affect the ability of the indoor unit to receive signals.
- If the operation lamp near the receiver on the indoor unit is flashing, the unit needs to be inspected. Consult your dealer for service.
- Handle the remote controller carefully. Do not drop the remote controller or subject it to strong shocks. In addition, do not get the remote controller wet or leave it in a location with high humidity.
- To avoid misplacing the remote controller, install the holder included with the remote controller on a wall and be sure to always place the remote controller in the holder after use.

Battery installation/replacement

1. Remove the top cover, insert two AAA batteries, and then install the top cover.

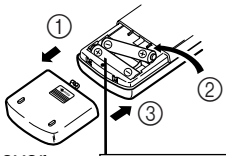

Top cover

Two AAA batteries
Insert the negative (–) end of each battery first. Install the batteries in the correct directions (+, –).

2. Press the Reset button.

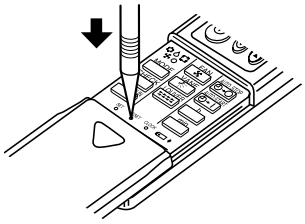

Press the Reset button with an object that has a narrow end.

3 SPECIFICATIONS

Model Name			SEZ-M25DA(L)		SEZ-M35DA(L)	
Operation Mode			Cooling	Heating	Cooling	Heating
Power source			220 - 240V (50/60Hz)		220 - 240V (50/60Hz)	
Power input		kW	0.04		0.05	
Current		A	0.39		0.46	
Temperature set range Remote controller		˚C(˚F)	19 to 30 (67 to 86)	17 to 28 (63 to 83)	19 to 30 (67 to 86)	17 to 28 (63 to 83)
Airflow direction			-		-	
Fan	Type x Quantity		Sirocco fan x 2		Sirocco fan x 2	
	External static press	Pa	5-15-35-50		5-15-35-50	
	Motor type		DC blushless motor		DC blushless motor	
	Motor output	kW	0.096		0.096	
	Driving mechanism		Direct-driven		Direct-driven	
	Airflow rate(Low-Mid-High)	m^3/min	5.5-7.0-9.0		7.0-9.0-11.0	
External finish			Galvanized		Galvanized	
External dimension H x W x D		mm	200 x 700 x 700		200 x 900 x 700	
		In.	7-7/8 x 27-9/16 x 27-9/16		7-7/8 x 35-7/16 x 27-9/16	
Net weight		kg	17.5		21	
Wiring	Min.size of wire	mm(in.)	1.6 (1/8)		1.6 (1/8)	
	Amperage of wire breaker	A	15		15	
Refrigerant piping diameter	Liquid R32/R410A	mm(in.)	ø6.35 (ø1/4) Flare		ø6.35 (ø1/4) Flare	
	Gas R32/R410A	mm(in.)	ø9.52 (ø3/8) Flare		ø9.52 (ø3/8) Flare	
Drain piping diameter		mm(in.)	O.D. 32 (1-9/32)		O.D. 32 (1-9/32)	
Sound pressure level (Low-Mid-High) (measured in anechoic room)		dB<A>	23-26-30		23-28-33	
Insulation material			Polystyrene foam, Polyethylene foam, Urethane foam		Polystyrene foam, Polyethylene foam, Urethane foam	
Air filter			PP Honeycomb fabric (washable)		PP Honeycomb fabric (washable)	
Refrigerant control device			-		-	
Protection devices			Fuse (250V 6.3A)		Fuse (250V 6.3A)	
Heat exchanger			Cross fin (Aluminum fin and copper tube)		Cross fin (Aluminum fin and copper tube)	
Varistor			ERZV10D471		ERZV10D471	
Terminal block			To outdoor unit : 3P To wired remote controller : 2P		To outdoor unit : 3P To wired remote controller : 2P	
Power outlet		A	10		10	
Standard attachment	Document		Installation Manual, Instruction Book		Installation Manual, Instruction Book	
	Accessory	*3	Drain hose (flexible joint), Remote Controller		Drain hose (flexible joint), Remote Controller	
Optional parts			Drain lift-up mechanism (PAC-KE07DM-E)		Drain lift-up mechanism (PAC-KE07DM-E)	
Remark						
Note	1.Cooling/Heating capacity indicates the maximum value at operation under the following condition. <Cooling> Indoor: 27˚CD.B./19˚CW.B. (81˚FD.B. / 66˚FW.B. Outdoor:35˚CD.B. (95˚FD.B.) <Heating> Indoor:20˚CD.B. (68˚FD.B.) Outdoor:7˚CD.B. / 6˚CW.B. (45˚FD.B. / 43˚FW.B.) Pipe length: 7.5m (24-9/16ft) Height difference: 0m (0ft) 2.The external static pressure is set to 15 Pa at factory shipment. 3.Wired Remote Controller (optional) for DA model , Wireless Remote Controller (supplied) for DAL model					

Model Name			SEZ-M50DA(L)		SEZ-M60DA(L)	
Operation Mode			Cooling	Heating	Cooling	Heating
Power source			220 - 240V (50/60Hz)		220 - 240V (50/60Hz)	
Power input		kW	0.07		0.07	
Current		A	0.63		0.63	
Temperature set range Remote controller		˚C(˚F)	19 to 30 (67 to 86)	17 to 28 (63 to 83)	19 to 30 (67 to 86)	17 to 28 (63 to 83)
Airflow direction			-		-	
Fan	Type x Quantity		Sirocco fan x 3		Sirocco fan x 4	
	External static press	Pa	5-15-35-50		5-15-35-50	
	Motor type		DC blushless motor		DC blushless motor	
	Motor output	kW	0.096		0.096	
	Driving mechanism		Direct-driven		Direct-driven	
	Airflow rate(Low-Mid-High)	m^3/min	10.0-12.5-15.0		12.0-15.0-18.0	
External finish			Galvanized		Galvanized	
External dimension H x W x D		mm	200 x 900 x 700		200 x 1100 x 700	
		In.	7-7/8 x 35-7/16 x 27-9/16		7-7/8 x 43-5/16 x 27-9/16	
Net weight		kg	22		25.5	
Wiring	Min.size of wire	mm(in.)	1.6 (1/8)		1.6 (1/8)	
	Amperage of wire breaker	A	15		15	
Refrigerant piping diameter	Liquid R32/R410A	mm(in.)	ø6.35 (ø1/4) Flare		ø6.35 (ø1/4) Flare	
	Gas R32/R410A	mm(in.)	ø12.7 (ø1/2) Flare		ø15.88 (ø5/8) Flare	
Drain piping diameter		mm(in.)	O.D. 32 (1-9/32)		O.D. 32 (1-9/32)	
Sound pressure level (Low-Mid-High) (measured in anechoic room)		dB<A>	30-34-37		30-34-38	
Insulation material			Polystyrene foam, Polyethylene foam, Urethane foam		Polystyrene foam, Polyethylene foam, Urethane foam	
Air filter			PP Honeycomb fabric (washable)		PP Honeycomb fabric (washable)	
Refrigerant control device			-		-	
Protection devices			Fuse (250V 6.3A)		Fuse (250V 6.3A)	
Heat exchanger			Cross fin (Aluminum fin and copper tube)		Cross fin (Aluminum fin and copper tube)	
Varistor			ERZV10D471		ERZV10D471	
Terminal block			To outdoor unit : 3P To wired remote controller : 2P		To outdoor unit : 3P To wired remote controller : 2P	
Power outlet		A	20		20	
Standard attachment	Document		Installation Manual, Instruction Book		Installation Manual, Instruction Book	
	Accessory	*3	Drain hose (flexible joint), Remote Controller		Drain hose (flexible joint), Remote Controller	
Optional parts			Drain lift-up mechanism (PAC-KE07DM-E)		Drain lift-up mechanism (PAC-KE07DM-E)	
Remark						
Note	1.Cooling/Heating capacity indicates the maximum value at operation under the following condition. <Cooling> Indoor: 27˚CD.B./19˚CW.B. (81˚FD.B. / 66˚FW.B. Outdoor:35˚CD.B. (95˚FD.B.) <Heating> Indoor:20˚CD.B. (68˚FD.B.) Outdoor:7˚CD.B. / 6˚CW.B. (45˚FD.B. / 43˚FW.B.) Pipe length: 7.5m (24-9/16ft) Height difference: 0m (0ft) 2.The external static pressure is set to 15 Pa at factory shipment. 3.Wired Remote Controller (optional) for DA model , Wireless Remote Controller (supplied) for DAL model						

Model Name				SEZ-M71DA(L)	
Operation Mode				Cooling	Heating
Power source				220 - 240V (50/60Hz)	
Power input			kW	0.10	
Current			A	0.84	
Temperature set range Remote controller			˚C(˚F)	19 to 30 (67 to 86)	17 to 28 (63 to 83)
Airflow direction				-	
Fan	Type x Quantity			Sirocco fan x 4	
	External static press		Pa	5-15-35-50	
	Motor type			DC blushless motor	
	Motor output		kW	0.096	
	Driving mechanism			Direct-driven	
	Airflow rate(Low-Mid-High)		m^3/min	12.0-16.0-20.0	
External finish				Galvanized	
External dimension H x W x D			mm	200 x 1100 x 700	
			In.	7-7/8 x 43-5/16 x 27-9/16	
Net weight			kg	25.5	
Wiring	Min.size of wire		mm(in.)	1.6 (1/8)	
	Amperage of wire breaker		A	15	
Refrigerant piping diameter	Liquid	R32/R410A	mm(in.)	ø9.52 (ø3/8) Flare	
	Gas	R32/R410A	mm(in.)	ø15.88 (ø5/8) Flare	
Drain piping diameter			mm(in.)	O.D. 32 (1-9/32)	
Sound pressure level (Low-Mid-High) (measured in anechoic room)			dB<A>	30-35-40	
Insulation material				Polystyrene foam, Polyethylene foam, Urethane foam	
Air filter				PP Honeycomb fabric (washable)	
Refrigerant control device				-	
Protection devices				Fuse (250V 6.3A)	
Heat exchanger				Cross fin (Aluminum fin and copper tube)	
Varistor				ERZV10D471	
Terminal block				To outdoor unit : 3P To wired remote controller : 2P	
Power outlet			A	20	
Standard attachment	Document			Installation Manual, Instruction Book	
	Accessory		*3	Drain hose (flexible joint), Remote Controller	
Optional parts				Drain lift-up mechanism (PAC-KE07DM-E)	
Remark					
Note	1.Cooling/Heating capacity indicates the maximum value at operation under the following condition. <Cooling> Indoor: 27˚CD.B./19˚CW.B. (81˚FD.B. / 66˚FW.B. Outdoor:35˚CD.B. (95˚FD.B.) <Heating> Indoor:20˚CD.B. (68˚FD.B.) Outdoor:7˚CD.B. / 6˚CW.B. (45˚FD.B. / 43˚FW.B.) Pipe length: 7.5m (24-9/16ft) Height difference: 0m (0ft) 2.The external static pressure is set to 15 Pa at factory shipment. 3.Wired Remote Controller (optional) for DA model , Wireless Remote Controller (supplied) for DAL model					

NOISE CRITERION CURVES

SEZ-M25DA(L)

External static pressure: 5Pa

<50/60Hz>

NOTCH	SPL(dB)	LINE
High	29	
Middle	25	
Low	22	

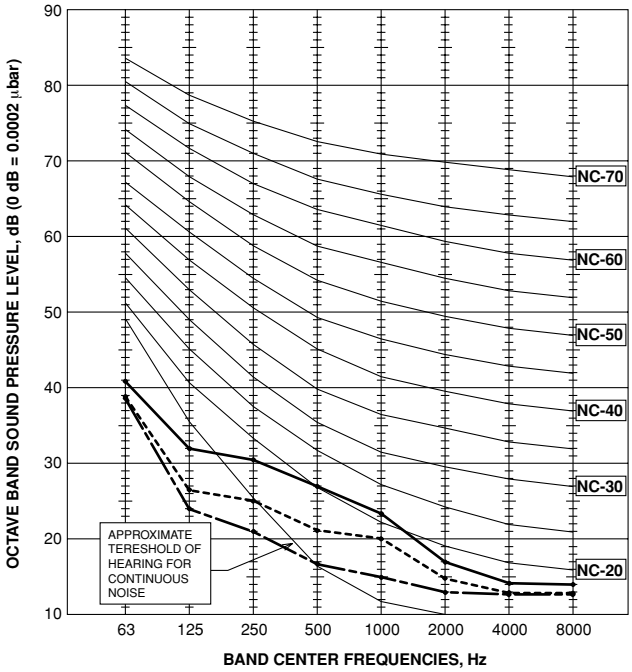

SEZ-M25DA(L)

External static pressure: 15Pa

<50/60Hz>

NOTCH	SPL(dB)	LINE
High	30	
Middle	26	
Low	23	

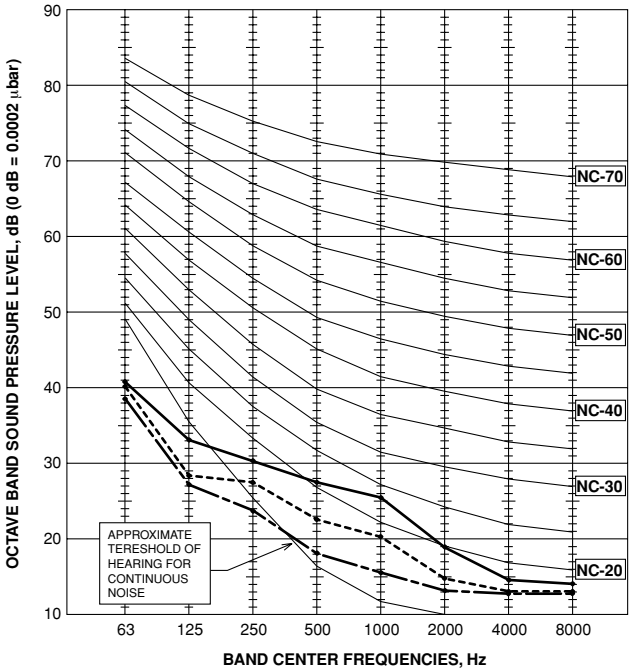

SEZ-M25DA(L)

External static pressure: 35Pa

<50/60Hz>

NOTCH	SPL(dB)	LINE
High	31	
Middle	28	
Low	24	

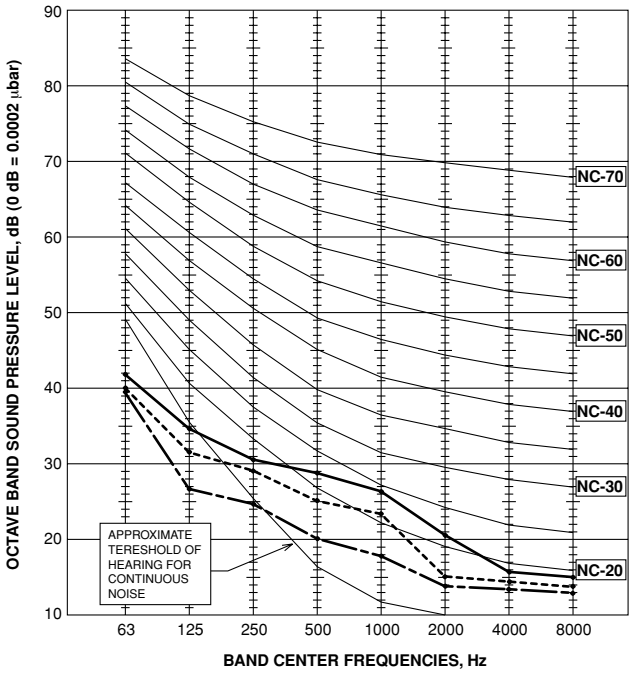

SEZ-M25DA(L)

External static pressure: 50Pa

<50/60Hz>

NOTCH	SPL(dB)	LINE
High	33	
Middle	29	
Low	25	

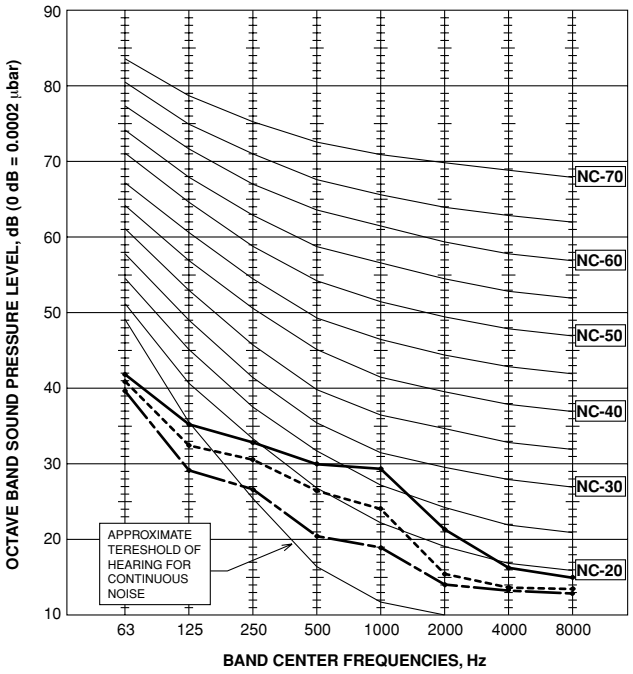

NOTE: The sound level is measured in an anechoic room where echoes are few, when compressor stops. The sound may be bigger than displayed level under actual installation condition by surrounding echoes. The sound level can be higher by about 2 dB than the displayed level during cooling and heating operation.

SEZ-M35DA(L)

External static pressure: 5Pa

<50/60Hz>

NOTCH	SPL(dB)	LINE
High	33	
Middle	28	
Low	23	

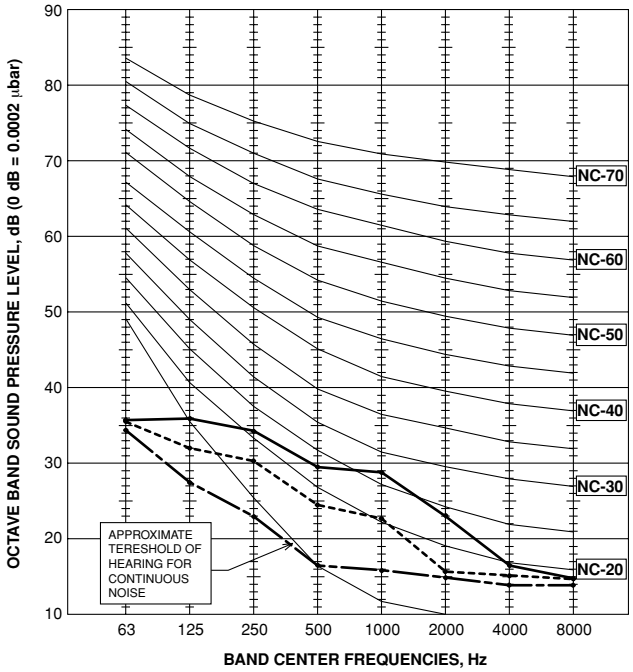

SEZ-M35DA(L)

External static pressure: 15Pa

<50/60Hz>

NOTCH	SPL(dB)	LINE
High	33	
Middle	28	
Low	23	

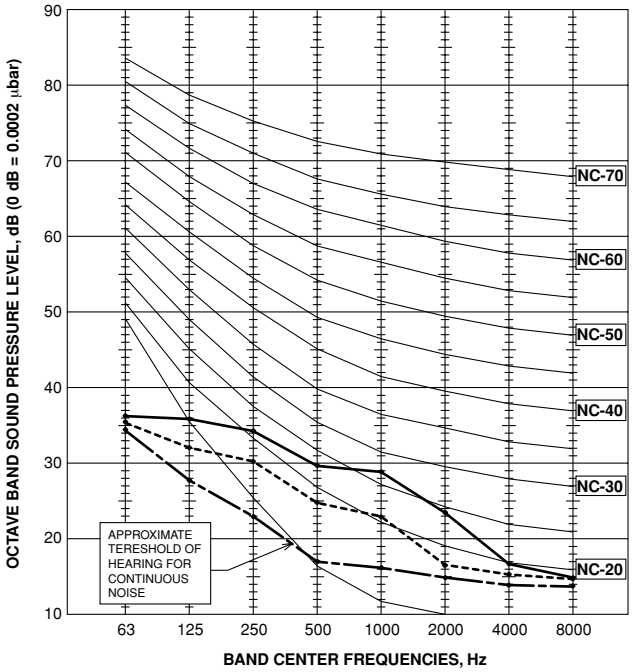

SEZ-M35DA(L)

External static pressure: 35Pa

<50/60Hz>

NOTCH	SPL(dB)	LINE
High	34	
Middle	29	
Low	24	

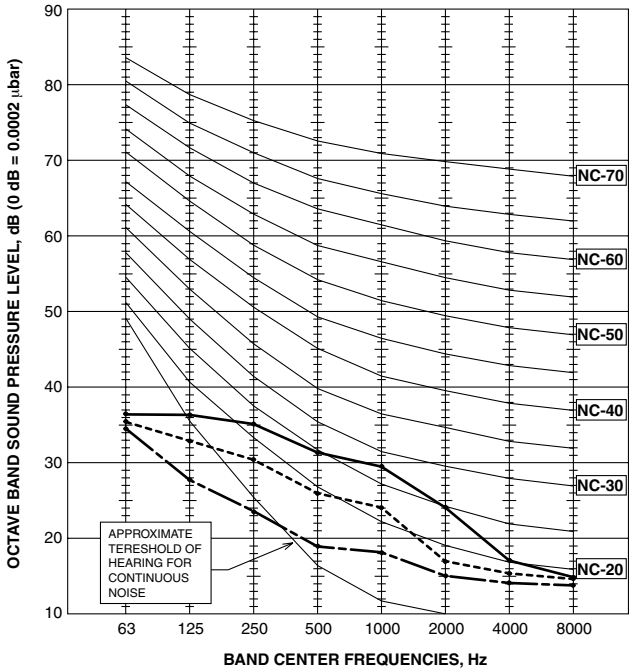

SEZ-M35DA(L)

External static pressure: 50Pa

<50/60Hz>

NOTCH	SPL(dB)	LINE
High	35	
Middle	31	
Low	25	

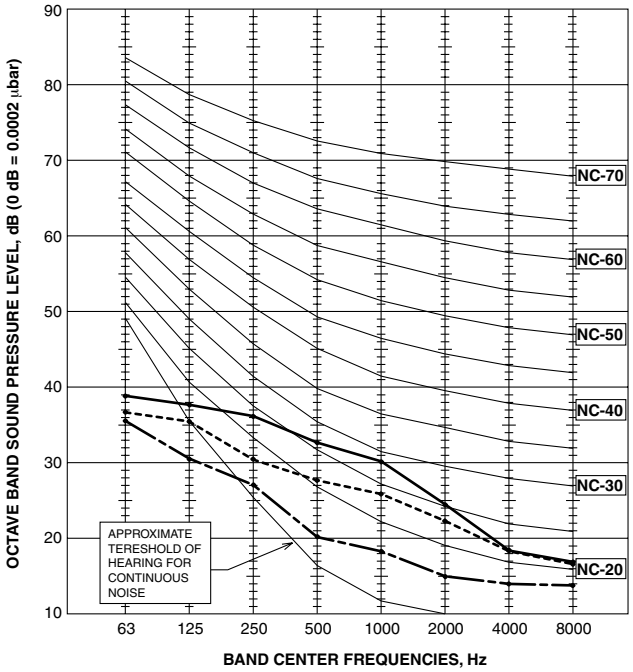

NOTE: The sound level is measured in an anechoic room where echoes are few, when compressor stops. The sound may be bigger than displayed level under actual installation condition by surrounding echoes. The sound level can be higher by about 2 dB than the displayed level during cooling and heating operation.

SEZ-M50DA(L)

External static pressure: 5Pa

<50/60Hz>

NOTCH	SPL(dB)	LINE
High	36	
Middle	33	
Low	29	

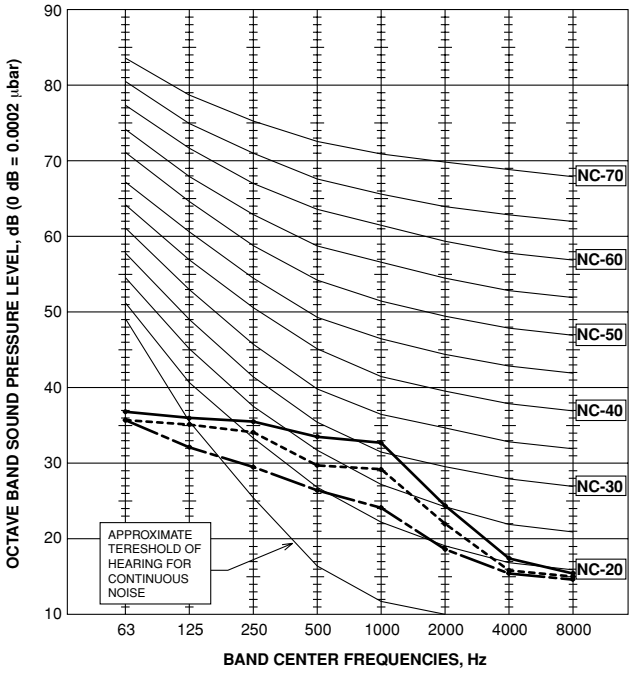

SEZ-M50DA(L)

External static pressure: 15Pa

<50/60Hz>

NOTCH	SPL(dB)	LINE
High	37	
Middle	34	
Low	30	

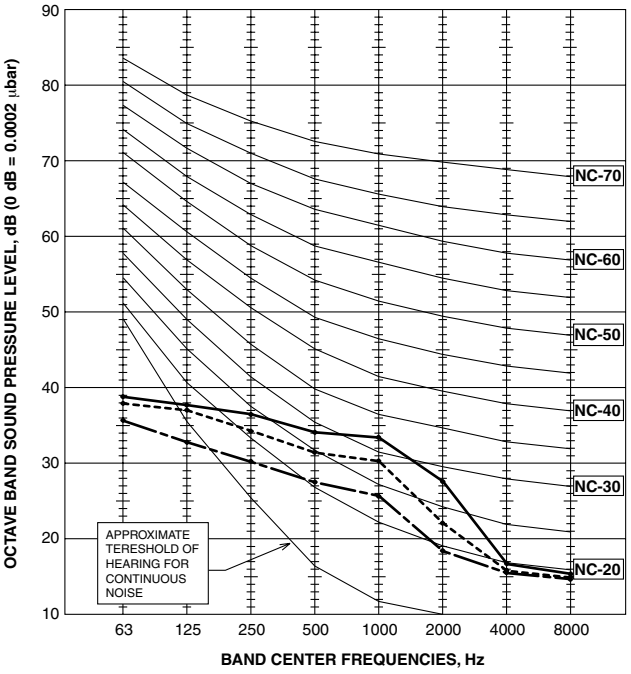

SEZ-M50DA(L)

External static pressure: 35Pa

<50/60Hz>

NOTCH	SPL(dB)	LINE
High	38	
Middle	35	
Low	31	

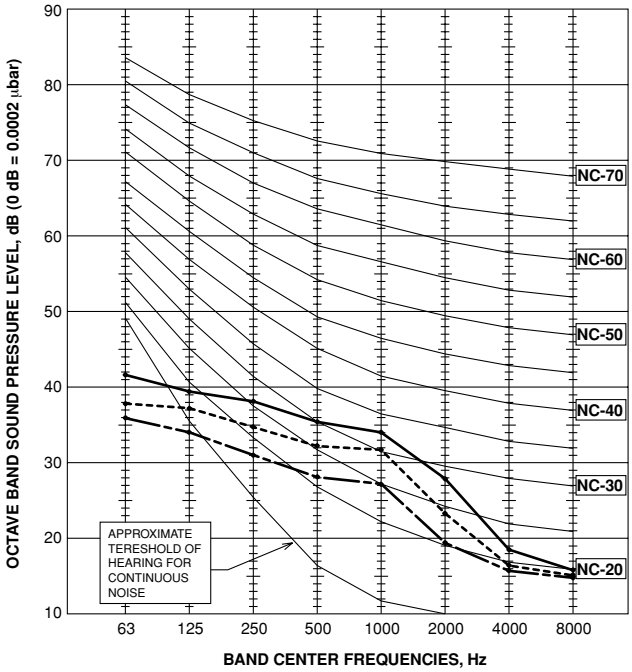

SEZ-M50DA(L)

External static pressure: 50Pa

<50/60Hz>

NOTCH	SPL(dB)	LINE
High	39	
Middle	36	
Low	32	

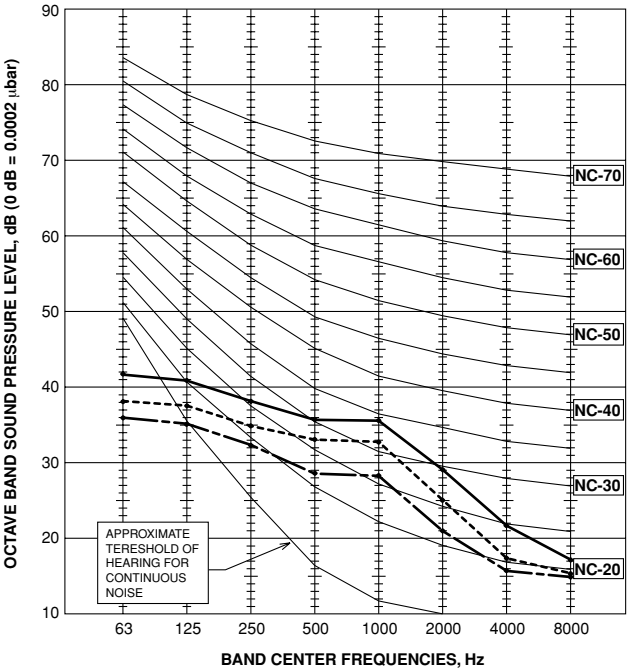

NOTE: The sound level is measured in an anechoic room where echoes are few, when compressor stops. The sound may be bigger than displayed level under actual installation condition by surrounding echoes. The sound level can be higher by about 2 dB than the displayed level during cooling and heating operation.

SEZ-M60DA(L)

External static pressure: 5Pa

<50/60Hz>

NOTCH	SPL(dB)	LINE
High	37	
Middle	33	
Low	29	

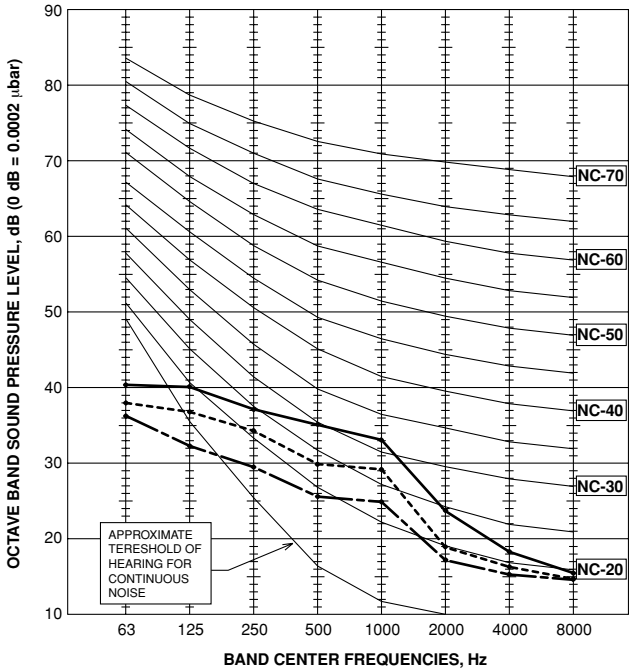

SEZ-M60DA(L)

External static pressure: 15Pa

<50/60Hz>

NOTCH	SPL(dB)	LINE
High	38	
Middle	34	
Low	30	

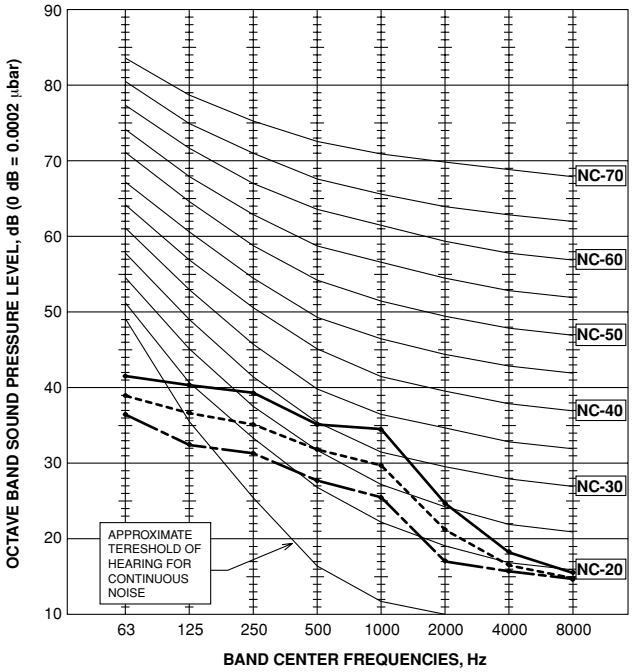

SEZ-M60DA(L)

External static pressure: 35Pa

<50/60Hz>

NOTCH	SPL(dB)	LINE
High	39	
Middle	35	
Low	31	

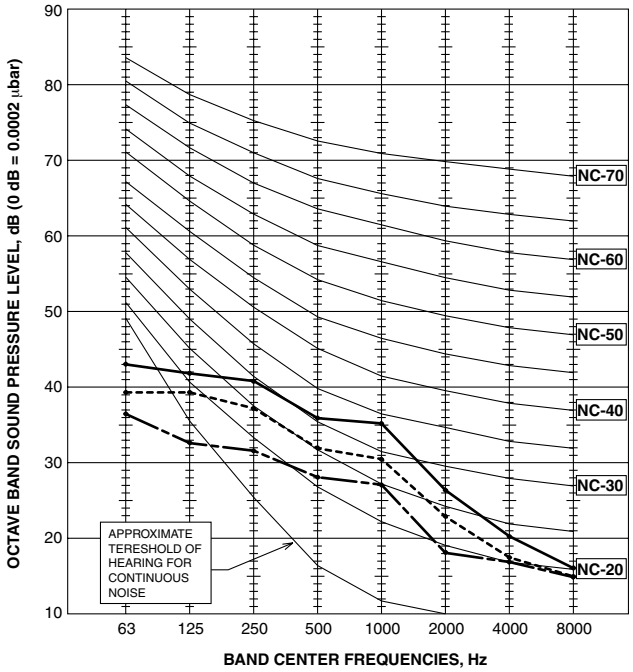

SEZ-M60DA(L)

External static pressure: 50Pa

<50/60Hz>

NOTCH	SPL(dB)	LINE
High	39	
Middle	36	
Low	32	

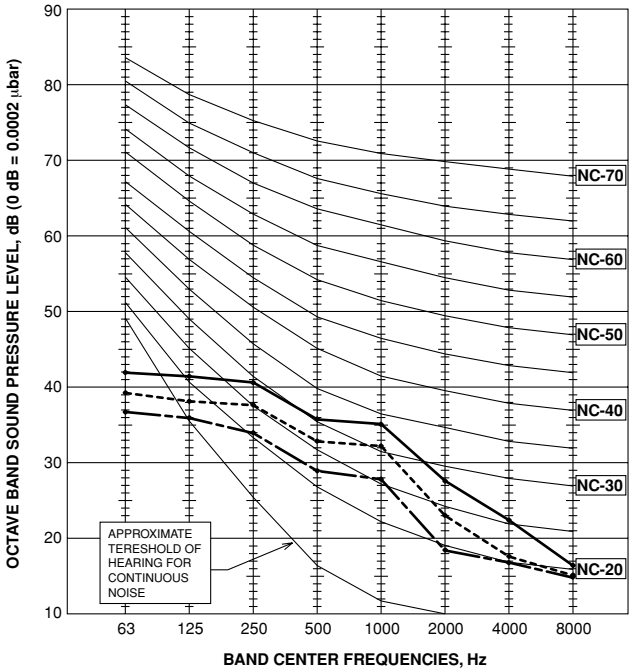

NOTE: The sound level is measured in an anechoic room where echoes are few, when compressor stops. The sound may be bigger than displayed level under actual installation condition by surrounding echoes. The sound level can be higher by about 2 dB than the displayed level during cooling and heating operation.

SEZ-M71DA(L)

External static pressure: 5Pa

<50/60Hz>

NOTCH	SPL(dB)	LINE
High	39	
Middle	34	
Low	29	

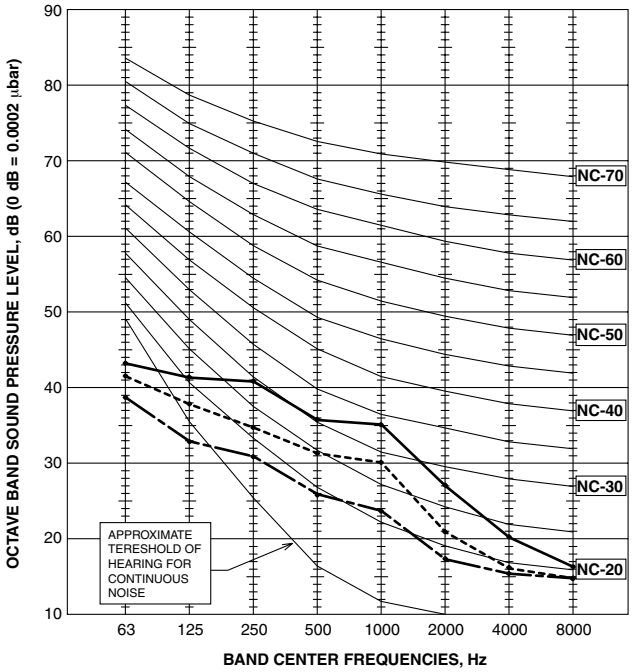

SEZ-M71DA(L)

External static pressure: 15Pa

<50/60Hz>

NOTCH	SPL(dB)	LINE
High	40	
Middle	35	
Low	30	

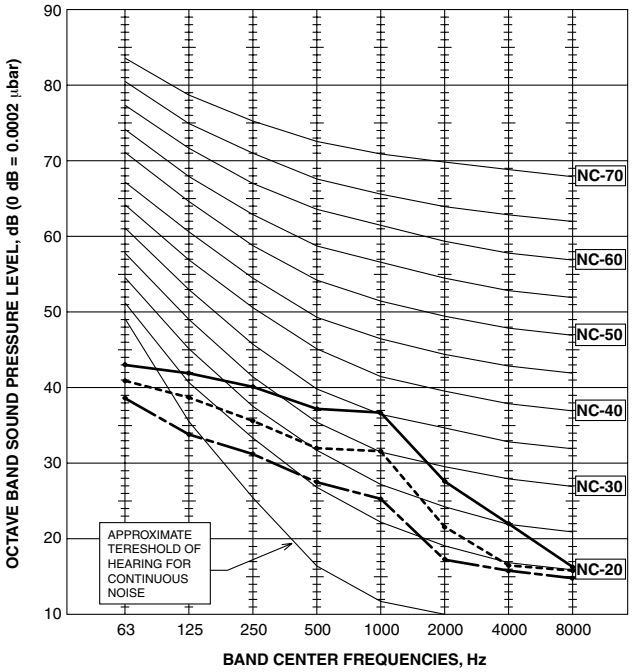

SEZ-M71DA(L)

External static pressure: 35Pa

<50/60Hz>

NOTCH	SPL(dB)	LINE
High	41	
Middle	36	
Low	31	

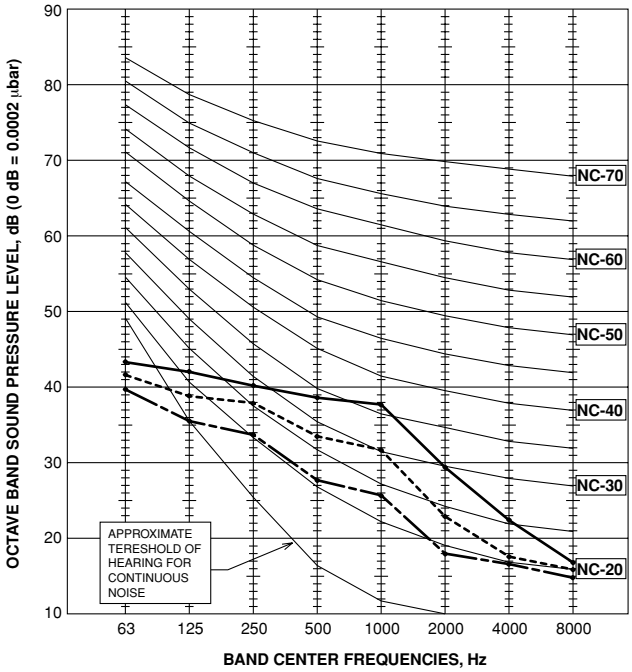

SEZ-M71DA(L)

External static pressure: 50Pa

<50/60Hz>

NOTCH	SPL(dB)	LINE
High	42	
Middle	37	
Low	32	

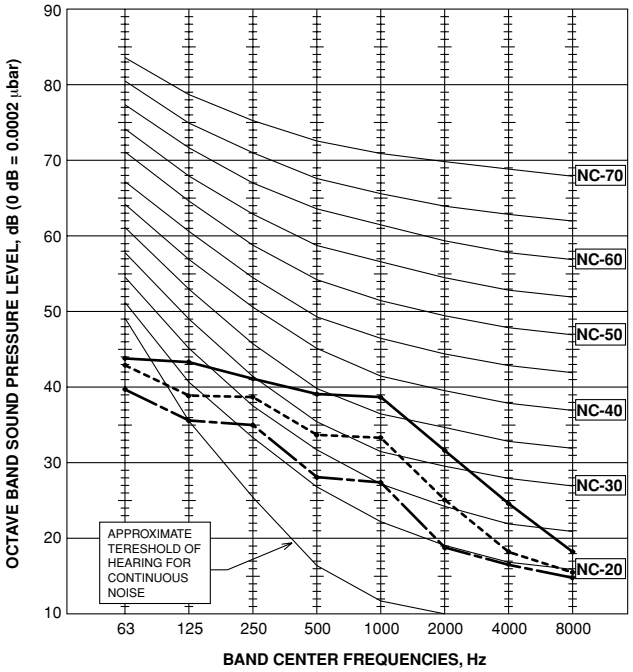

NOTE: The sound level is measured in an anechoic room where echoes are few, when compressor stops. The sound may be bigger than displayed level under actual installation condition by surrounding echoes. The sound level can be higher by about 2 dB than the displayed level during cooling and heating operation.

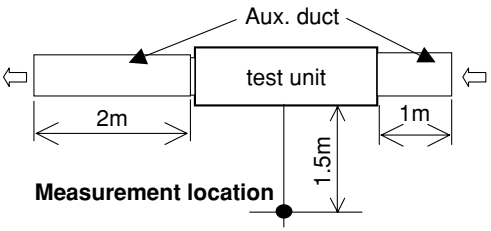

INDOOR FAN PERFORMANCE AND CORRECTED AIR FLOW

SEZ-M25DA(L)

(External static pressure 5Pa) 220-240V 50/60Hz

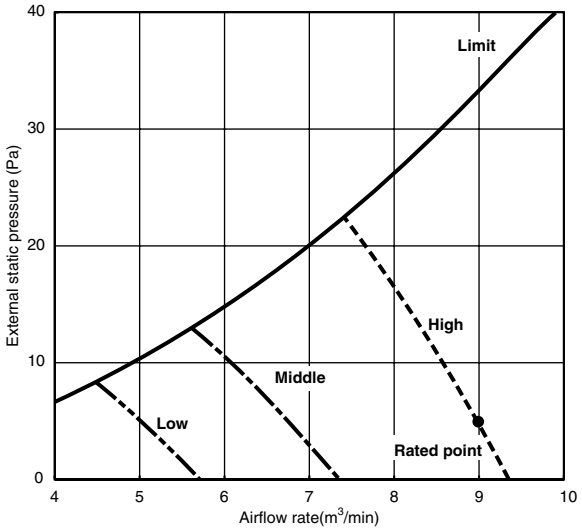

SEZ-M25DA(L)

(External static pressure 15Pa) 220-240V 50/60Hz

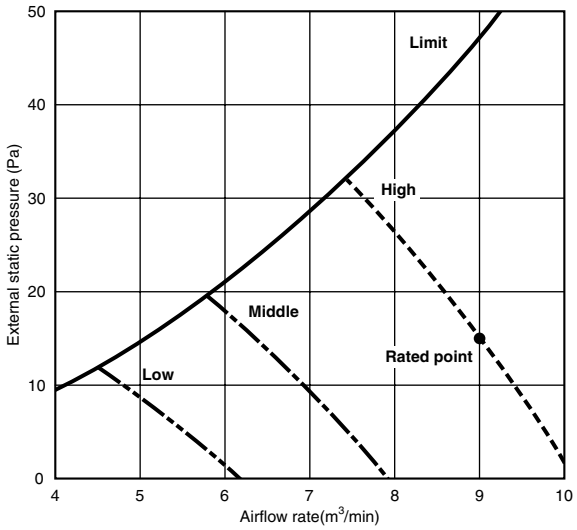

SEZ-M25DA(L)

(External static pressure 35Pa) 220-240V 50/60Hz

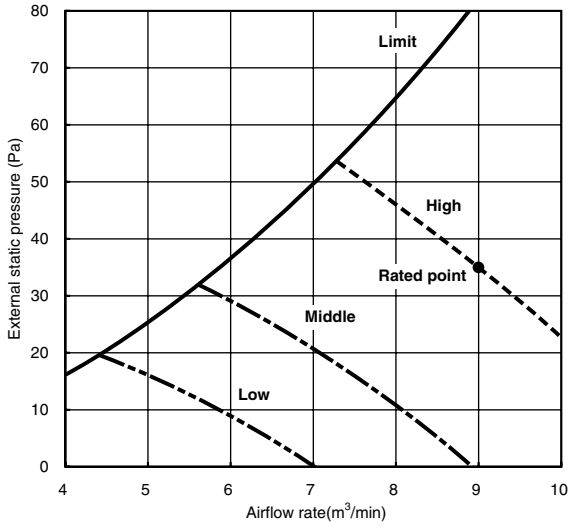

SEZ-M25DA(L)

(External static pressure 50Pa) 220-240V 50/60Hz

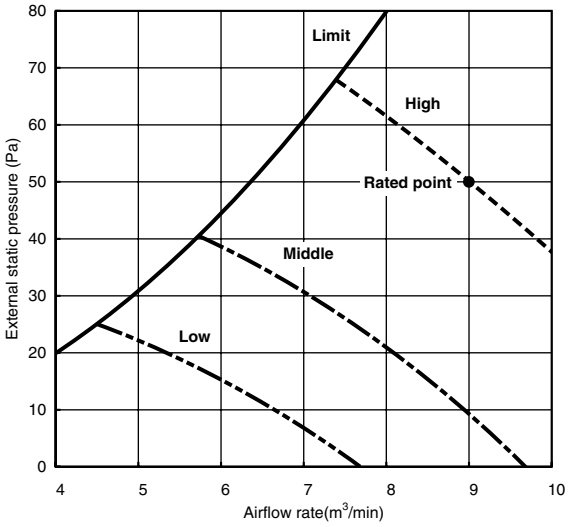

SEZ-M35DA(L)

(External static pressure 5Pa) 220-240V 50/60Hz

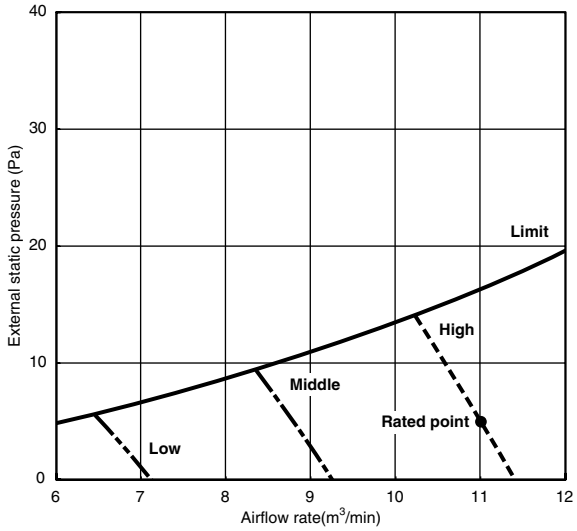

SEZ-M35DA(L)

(External static pressure 15Pa) 220-240V 50/60Hz

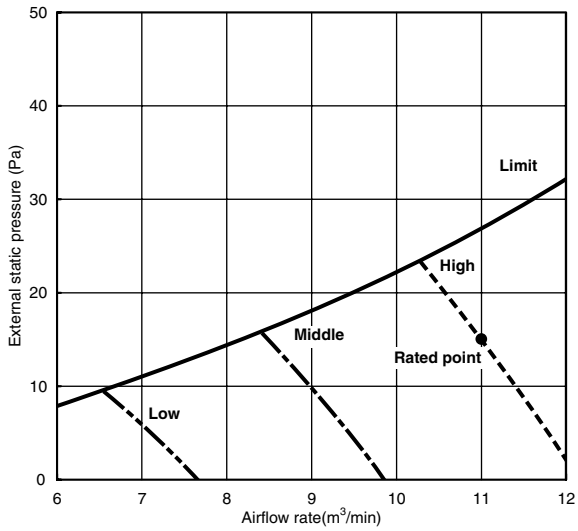

SEZ-M35DA(L)

(External static pressure 35Pa) 220-240V 50/60Hz

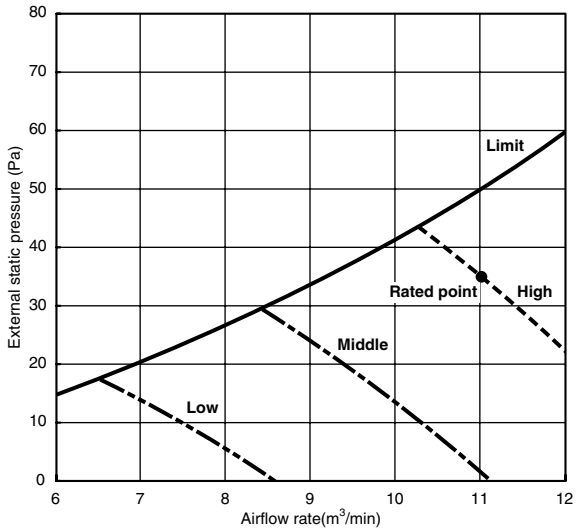

SEZ-M35DA(L)

(External static pressure 50Pa) 220-240V 50/60Hz

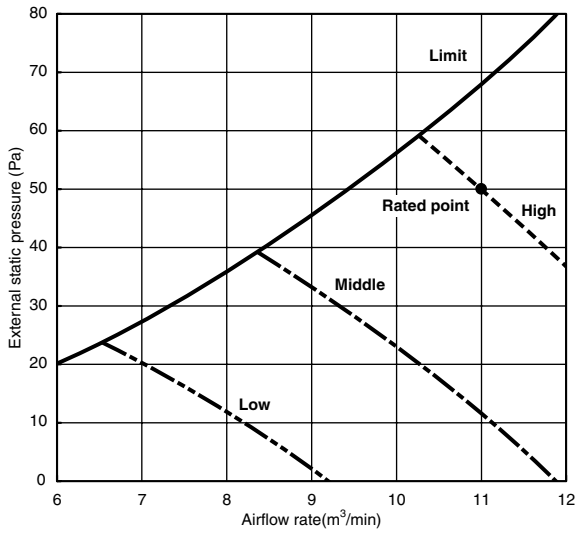

SEZ-M50DA(L)

(External static pressure 5Pa) 220-240V 50/60Hz

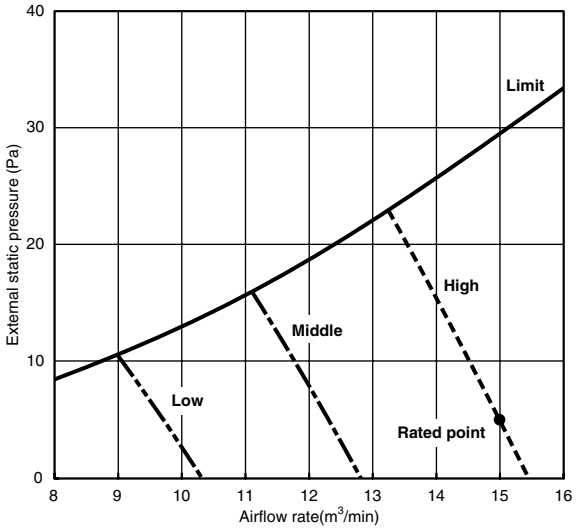

SEZ-M50DA(L)

(External static pressure 15Pa) 220-240V 50/60Hz

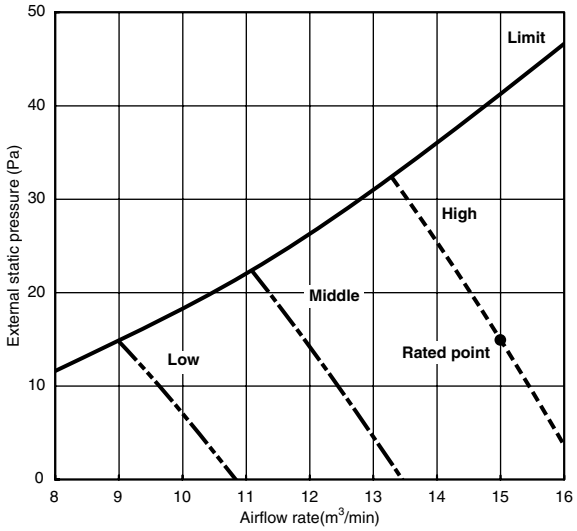

SEZ-M50DA(L)

(External static pressure 35Pa) 220-240V 50/60Hz

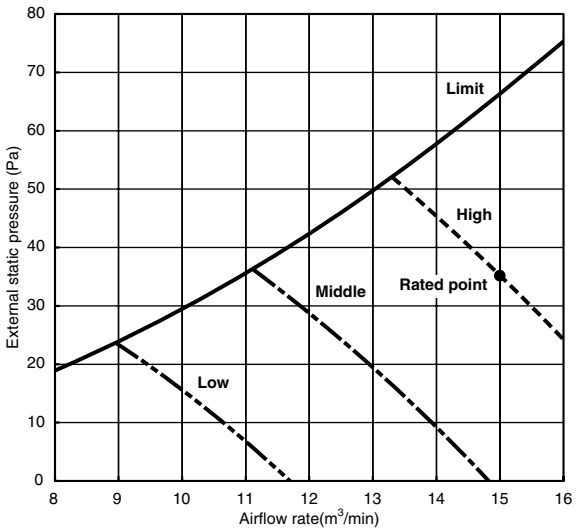

SEZ-M50DA(L)

(External static pressure 50Pa) 220-240V 50/60Hz

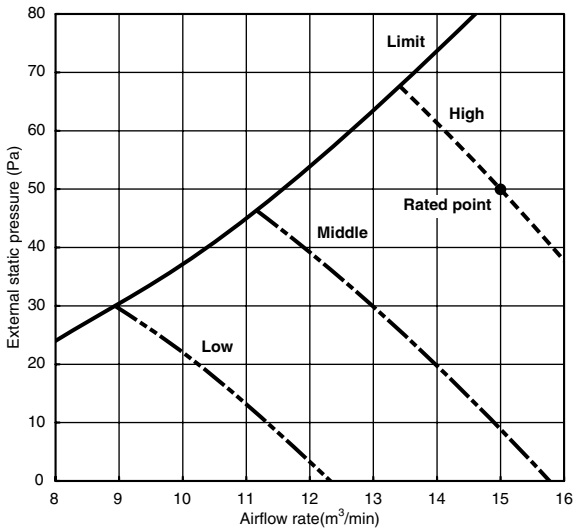

SEZ-M60DA(L)

(External static pressure 5Pa) 220-240V 50/60Hz

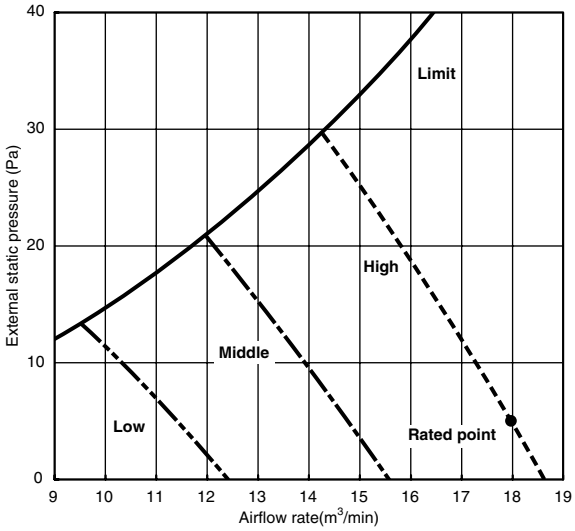

SEZ-M60DA(L)

(External static pressure 15Pa) 220-240V 50/60Hz

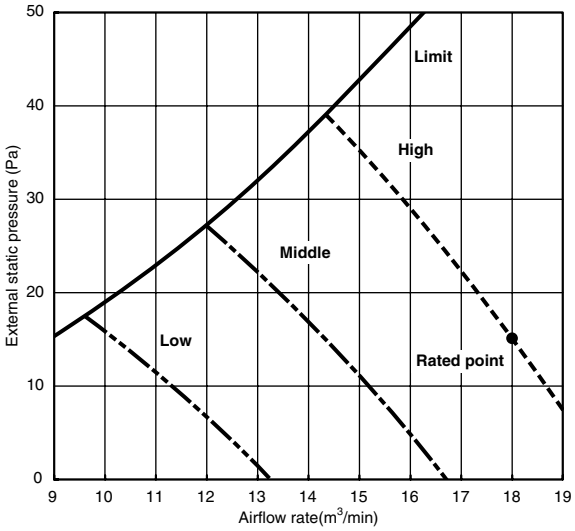

SEZ-M60DA(L)

(External static pressure 35Pa) 220-240V 50/60Hz

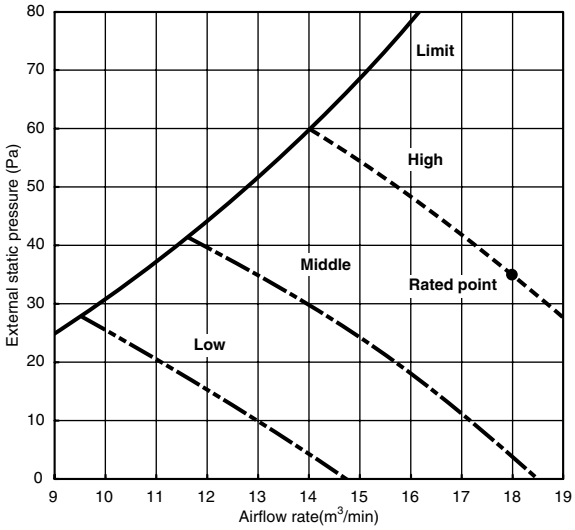

SEZ-M60DA(L)

(External static pressure 50Pa) 220-240V 50/60Hz

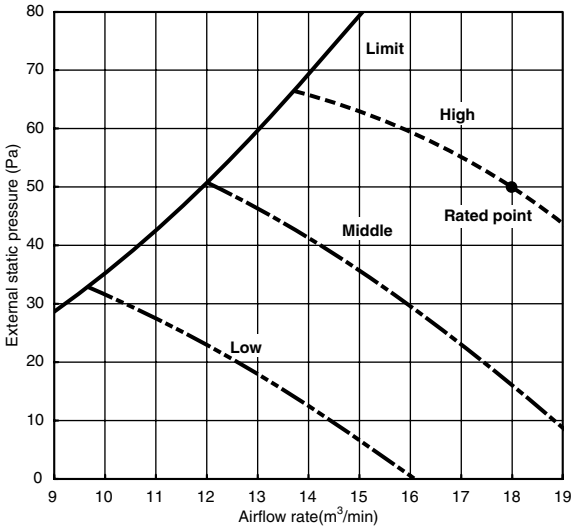

SEZ-M71DA(L)

(External static pressure 5Pa) 220-240V 50/60Hz

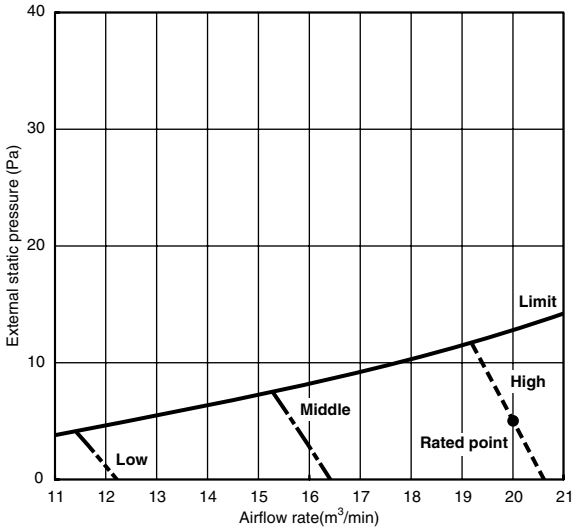

SEZ-M71DA(L)

(External static pressure 15Pa) 220-240V 50/60Hz

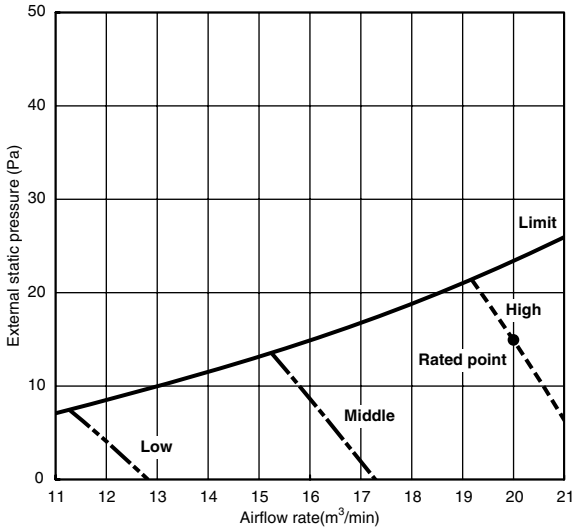

SEZ-M71DA(L)

(External static pressure 35Pa) 220-240V 50/60Hz

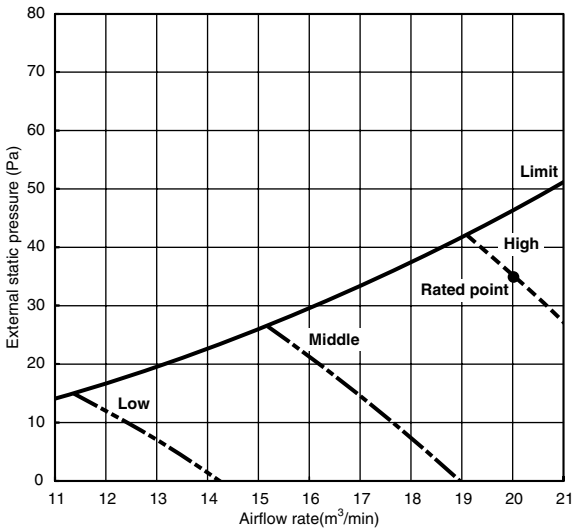

SEZ-M71DA(L)

(External static pressure 50Pa) 220-240V 50/60Hz

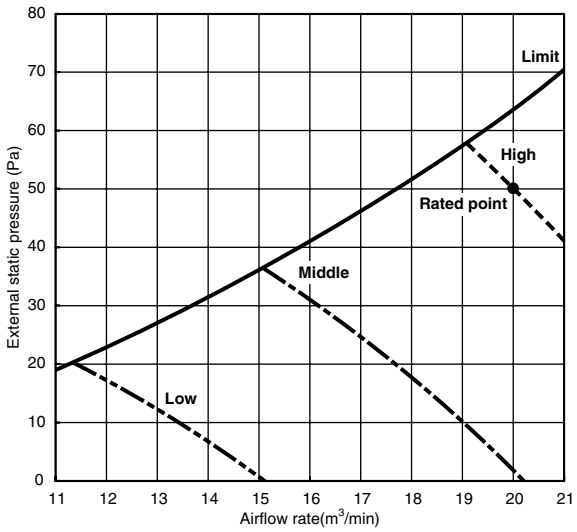

4 OUTLINES AND DIMENSIONS

SEZ-M25DA(L)
SEZ-M35DA(L)
SEZ-M50DA(L)
SEZ-M60DA(L)
SEZ-M71DA(L)

Unit : mm

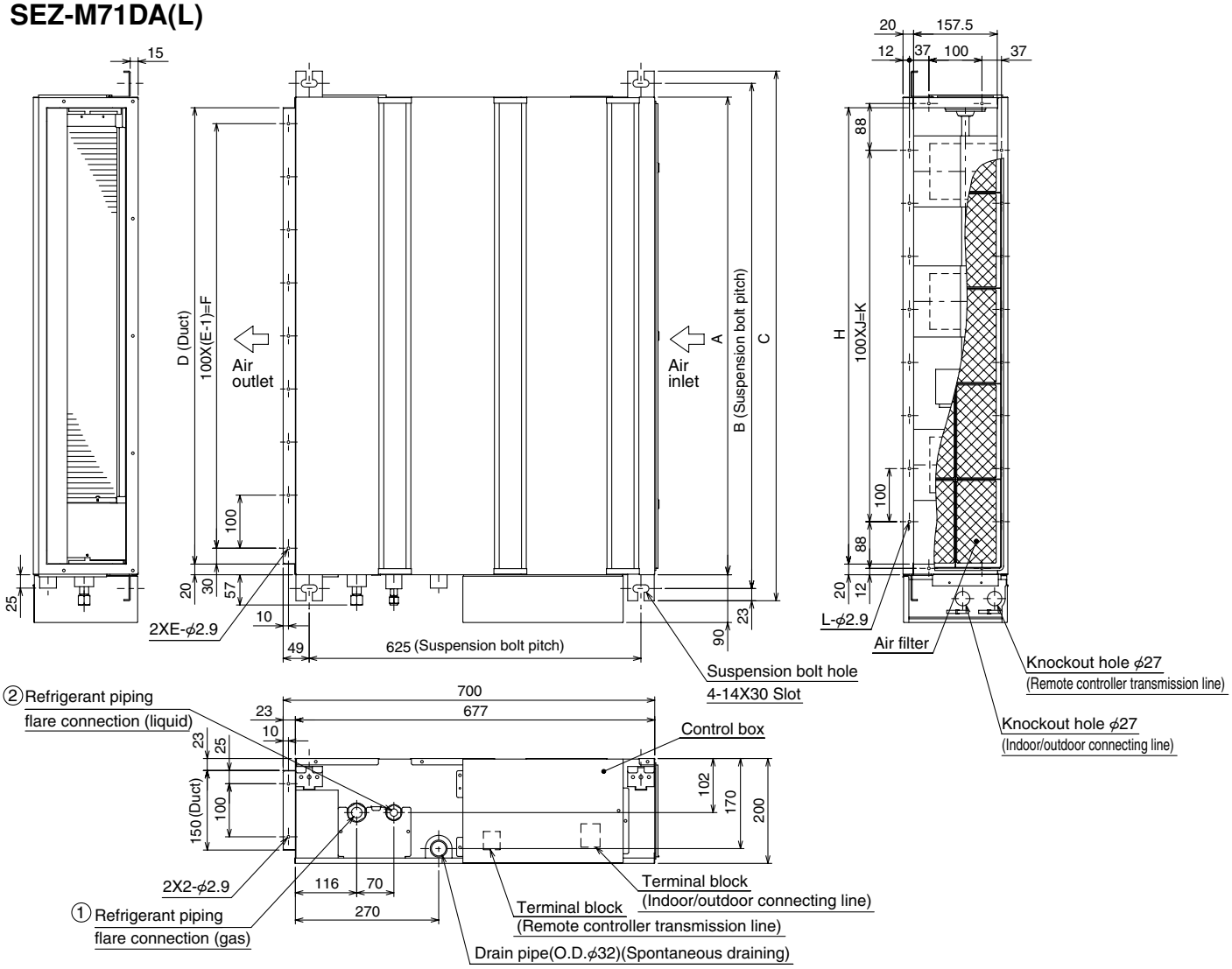

Model	A	B	C	D	E	F	G	H	J	K	L	① Gas pipe	② Liquid pipe
SEZ-M25DA(L)	700	752	798	660	7	600	800	660	5	500	16	φ9.52	φ6.35
SEZ-M35DA(L)	900	952	998	860	9	800	1000	860	7	700	20		
SEZ-M50DA(L)												φ12.7	
SEZ-M60DA(L)	1100	1152	1198	1060	11	1000	1200	1060	9	900	24	φ15.88	
SEZ-M71DA(L)													φ9.52

Note1.Use M10 screw for the suspension bolt (field supply).
2.Keep the service space for the maintenance at the bottom.
3.This chart indicates for SEZ-M50DA(L) model,which has 3 fans.
SEZ-M25,35DA(L) models have 2 fans.
SEZ-M60,71DA(L) models have 4 fans.
4.In case an inlet duct is used,remove the air filter (supply with the unit), then install the filter (field supply) at suction side.

SEZ-M25DA(L)
SEZ-M35DA(L)
SEZ-M50DA(L)
SEZ-M60DA(L)
SEZ-M71DA(L)

Secure enough access space to allow for the maintenance, inspection, and replacement of the motor, fan, drain pump, heat exchanger, and electric box in one of the following ways.
Select an installation site for the indoor unit so that its maintenance access space will not be obstructed by beams or other objects.

(1) When a space of 300 mm or more is available below the unit between the unit and the ceiling (Fig. 1)
- Create access door 1 and 2 (450 x 450 mm each) as shown in Fig. 2.
  (Access door 2 is not required if enough space is available below the unit for a maintenance worker to work in).

(2) When a space of less than 300 mm is available below the unit between the unit and the ceiling (At least 20 mm of space should be left below the unit as shown in Fig. 3.)
- Create access door 1 diagonally below the electric box and access door 3 below the unit as shown in Fig. 4.
  or
- Create access door 4 below the electric box and the unit as shown in Fig. 5.

Unit : mm

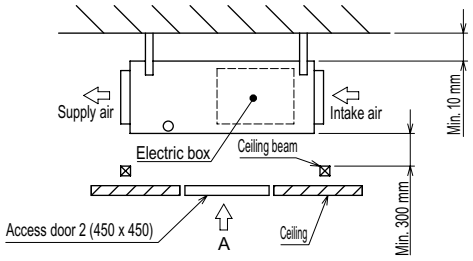

Fig. 1

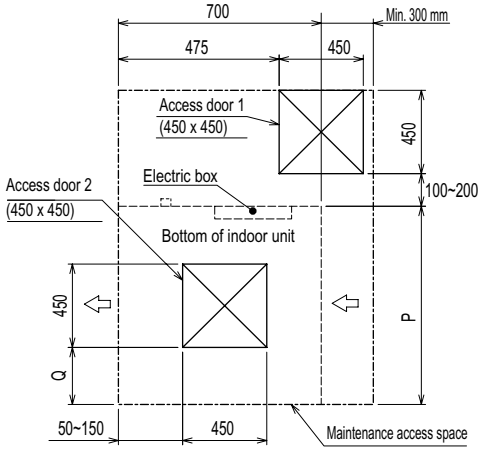

Fig. 2 (Viewed from the direction of the arrow A)

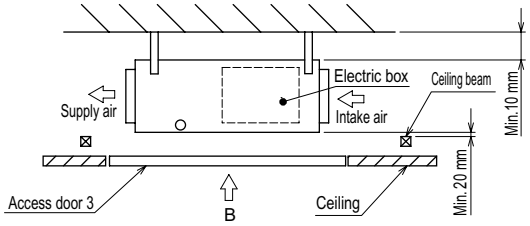

Fig. 3

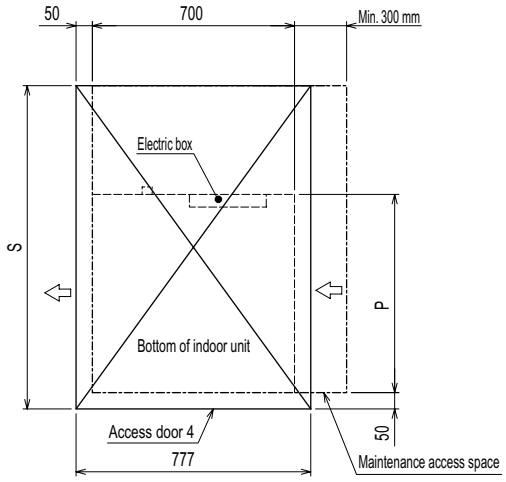

Fig. 5 (Viewed from the direction of the arrow B)

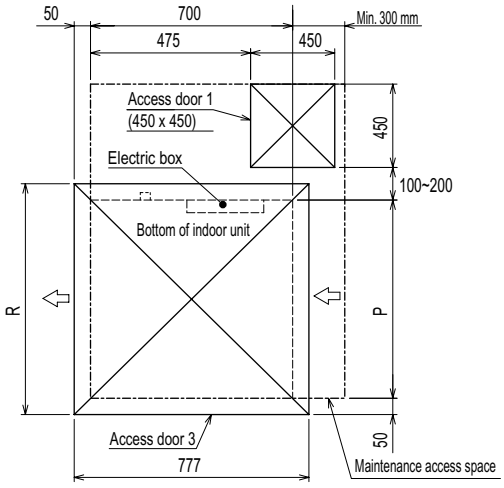

Fig. 4 (Viewed from the direction of the arrow B)

(mm)

Model	P	Q	R	S
SEZ-M25	700	50~150	800	1300
SEZ-M35, 50	900	150~250	1000	1500
SEZ-M60, 71	1100	250~350	1200	1700

5 WIRING DIAGRAM

SEZ-M25DA(L)
SEZ-M35DA(L)
SEZ-M50DA(L)
SEZ-M60DA(L)
SEZ-M71DA(L)

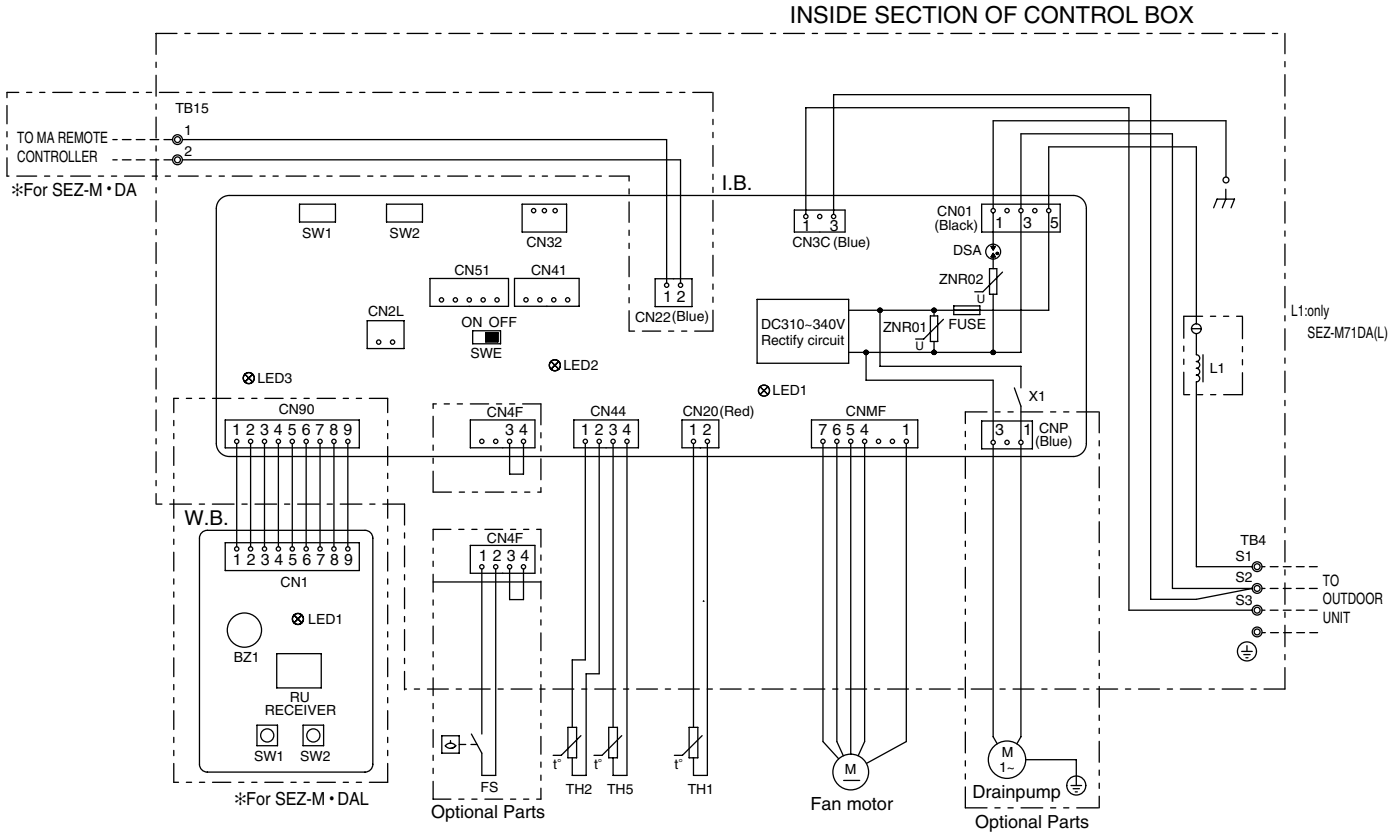

SYMBOL EXPLANATION

SYMBOL	NAME	SYMBOL	NAME
I.B.	INDOOR CONTROLLER BOARD	W.B.	WIRELESS REMOTE CONTROLLER BOARD
FUSE	FUSE AC250V 6.3A	RU	RECEIVING UNIT
ZNR01,02	VARISTOR	BZ1	BUZZER
DSA	ARRESTER	LED1	LED (RUN INDICATOR)
X1	AUX. RELAY	SW1	SWITCH (HEATING ON/OFF)
CN2L	CONNECTOR (LOSSNAY)	SW2	SWITCH (COOLING ON/OFF)
CN32	CONNECTOR (REMOTE SWITCH)	TH1	INTAKE AIR TEMP. THERMISTOR
CN41	CONNECTOR (HA TERMINAL-A)	TH2	PIPE TEMP. THERMISTOR/LIQUID
CN51	CONNECTOR (CENTRALLY CONTROL)	TH5	COND. /EVA. TEMP. THERMISTOR
CN90	CONNECTOR (WIRELESS)	L1	AC REACTOR (POWER FACTOR IMPROVEMENT)
LED1	POWER SUPPLY (I.B.)	FS	FLOAT SWITCH
LED2	POWER SUPPLY (I.B.)	TB4	TERMINAL BLOCK (INDOOR/OUTDOOR CONNECTING LINE)
LED3	TRANSMISSION (INDOOR-OUTDOOR)		
SW1	SWITCH (FOR MODEL SELECTION)	TB15	TERMINAL BLOCK (REMOTE CONTROLLER TRANSMISSION LINE)
SW2	SWITCH (FOR CAPACITY CODE)		
SWE	CONNECTOR (EMERGENCY OPERATION)		

NOTE)1. Since the outdoor side electric wiring may change be sure to check the outdoor unit electric wiring for servicing.
2. Indoor and outdoor connecting wires are made with polarities, make wiring matching terminal numbers(S1,S2,S3).
3. Symbols used in wiring diagram above are,
⊖:Connector, ◎:Terminal Block.

6 REFRIGERANT SYSTEM DIAGRAM

SEZ-M25DA(L)
SEZ-M35DA(L)
SEZ-M50DA(L)
SEZ-M60DA(L)
SEZ-M71DA(L)

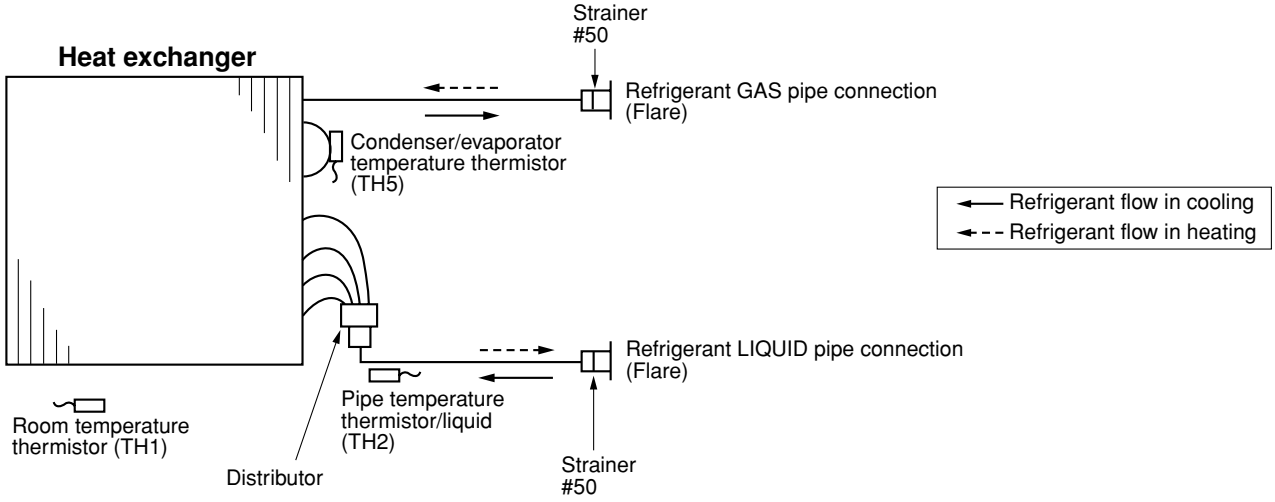

7 TROUBLESHOOTING

7-1. CAUTIONS ON TROUBLESHOOTING

(1) Before troubleshooting, check the followings:

① Check the power supply voltage.

② Check the indoor/outdoor connecting wire for mis-wiring.

(2) Take care the followings during servicing.

① Before servicing the air conditioner, be sure to turn off the remote controller first to stop the main unit, and then turn off the breaker.

② When removing the indoor controller board, hold the edge of the board with care NOT to apply stress on the components.

③ When connecting or disconnecting the connectors, hold the housing of the connector. DO NOT pull the lead wires.

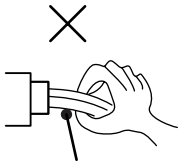

Lead wires

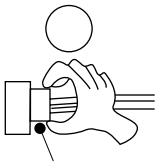

Housing point

7-2. SELF-CHECK FUNCTION

<Check code displayed by self-diagnosis and actions to be taken for service (summary)>

Present and past check codes are logged, and they can be displayed on the wired remote controller or controller board of outdoor unit. Actions to be taken for service, which depends on whether or not the trouble is reoccurring in the field, are summarized in the table below. Check the contents below before investigating details.

Unit conditions at service	Check code	Actions to be taken for service (summary)
The trouble is reoccurring.	Displayed	Judge what is wrong and take a corrective action according to “7-3. SELF-DIAGNOSIS ACTION TABLE”.
	Not displayed	Conduct troubleshooting and ascertain the cause of the trouble according to “7-4. TROUBLESHOOTING BY INFERIOR PHENOMENA”.
The trouble is not reoccurring.	Logged	① Consider the temporary defects such as the work of protection devices in the refrigerant circuit including compressor, poor connection of wiring, noise, etc. Re-check the symptom, and check the installation environment, refrigerant amount, weather when the trouble occurred, matters related to wiring, etc. ② Reset check code logs and restart the unit after finishing service. ③ There is no abnormality in electrical component, controller board, remote controller, etc.
	Not logged	① Re-check the abnormal symptom. ② Conduct troubleshooting and ascertain the cause of the trouble according to “7-4. TROUBLESHOOTING BY INFERIOR PHENOMENA”. ③ Continue to operate unit for the time being if the cause is not ascertained. ④ There is no abnormality concerning of parts such as electrical component, controller board, remote controller, etc.

• If the unit cannot be operated properly after the test run has been performed, refer to the following table to remove the cause.

Symptom			Cause
Wired remote controller		LED 1, 2 (PCB in outdoor unit)	
PLEASE WAIT	For about 2 minutes after power-on	After LED 1, 2 are lighted, LED 2 is turned off, then only LED 1 is lighted. (Correct operation)	• For about 2 minutes after power-on,operation of the remote controller is not possible due to system start-up. (Correct operation)
PLEASE WAIT → Error code	After about 2 minutes has expired after power-on	Only LED 1 is lighted. → LED 1, 2 blink.	• Connector for the outdoor unit's protection device is not connected. • Reverse or open phase wiring for the outdoor unit's power terminal block (L1, L2, L3)
Display messages do not appear even when operation switch is turned ON (operation lamp does not light up).		Only LED 1 is lighted. → LED 1 blinks twice, LED 2 blinks once.	• Incorrect wiring between indoor and outdoor units (incorrect polarity of S1, S2, S3) • Remote controller wire short

On the wireless remote controller with condition above, following phenomena take place.
• No signals from the remote controller are accepted.
• Operation lamp is blinking.
• The buzzer makes a short piping sound.

Note:
Operation is not possible for about 30 seconds after cancellation of function selection. (Correct operation)

For description of each LED (LED1, 2, 3) provided on the indoor controller, refer to the following table.

LED1 (power for microcomputer)	Indicates whether control power is supplied. Make sure that this LED is always lit.
LED2 (power for remote controller)	Indicates whether power is supplied to the remote controller. This LED lights only in the case of the indoor unit which is connected to the outdoor unit refrigerant address "0".
LED3 (communication between indoor and outdoor units)	Indicates state of communication between the indoor and outdoor units. Make sure that this LED is always blinking.

Wireless remote controller

(1) Turn on the power to the unit at least 12 hours before the test run.
(2) Press the TEST RUN button Ⓐ twice continuously.
(Start this operation from the status of remote controller display turned off.)
TEST RUN and current operation mode are displayed.
(3) Press the MODE button Ⓑ to activate COOL mode, then check whether cool air is blown out from the unit.
(4) Press the MODE button Ⓑ to activate HEAT mode, then check whether warm air is blown out from the unit.
(5) Press the FAN button Ⓒ and check whether fan speed changes.
(6) Press the VANE button Ⓓ and check whether the auto vane operates properly.
(7) Press the ON/OFF button to stop the test run.

Note:
• **Point the remote controller towards the indoor unit receiver while following steps (2) to (7).**
• **It is not possible to run the in FAN, DRY or AUTO mode.**

[Output pattern A] Errors detected by indoor unit

Wireless remote controller	Wired remote controller	Symptom	Remark
Beeper sounds/OPERATION INDICATOR lamp flashes (Number of times)	Check code		
1	P1	Intake sensor error	
2	P2, P9	Pipe (Liquid or 2-phase pipe) sensor error	
3	E6, E7	Indoor/outdoor unit communication error	
4	P4	Drain sensor error	
5	P5	Drain pump error	
6	P6	Freezing/Overheating safeguard operation	
7	EE	Communication error between indoor and outdoor units	
8	P8	Pipe temperature error	
9	E4	Remote controller signal receiving error	
10	–	–	
11	–	–	
12	Fb	Indoor unit control system error (memory error, etc.)	
14	PL	Refrigerant circuit abnormal	
No sound	– –	No corresponding	

[Output pattern B] Errors detected by unit other than indoor unit (outdoor unit, etc.)

Wireless remote controller	Symptom	Remark
Beeper sounds/OPERATION INDICATOR lamp flashes (Number of times)		
1	Indoor/outdoor unit communication error (Transmitting error) (Outdoor unit)	For details, check the LED display of the outdoor controller board.
2	Compressor overcurrent interruption	
3	Open/short of outdoor unit thermistors	
4	Compressor overcurrent interruption (When compressor locked)	
5	Abnormal high discharging temperature/49C worked/ insufficient refrigerant	
6	Abnormal high pressure (63H worked)/ Overheating safeguard operation	
7	Abnormal temperature of heat sink	
8	Outdoor unit fan protection stop	
9	Compressor overcurrent interruption/Abnormal of power module	
10	Abnormality of super heat due to low discharge temperature	
11	Abnormality such as overvoltage or voltage shortage and abnormal synchronous signal to main circuit/Current sensor error	
12	–	
13	–	
14	Other errors (Refer to the technical manual for the outdoor unit.)	

***1 If the beeper does not sound again after the initial two beeps to confirm the self-check start signal was received and the OPERATION INDICATOR lamp does not come on, there are no error records.**

***2 If the beeper sounds three times continuously "beep, beep, beep (0.4 + 0.4 + 0.4 sec.)" after the initial two beeps to confirm the self-check start signal was received, the specified refrigerant address is incorrect.**

- On wireless remote controller
  The continuous buzzer sounds from receiving section of indoor unit.
  Blink of operation lamp
- On wired remote controller
  Check code displayed on the LCD.

- If the unit cannot be operated properly after the test run has been performed, refer to the following table to remove the cause.

Symptom			Cause
Wired remote controller		LED 1, 2 (PCB in outdoor unit)	
PLEASE WAIT	For about 2 minutes following power-on	After LED 1, 2 are lighted, LED 2 is turned off, then only LED 1 is lighted. (Correct operation)	• For about 2 minutes after power-on, operation of the remote controller is not possible due to system start-up. (Correct operation)
PLEASE WAIT → Error code	After about 2 minutes has expired following power-on	Only LED 1 is lighted. → LED 1, 2 blink.	• Connector for the outdoor unit's protection device is not connected. • Reverse or open phase wiring for the outdoor unit's power terminal block (L1, L2, L3)
Display messages do not appear even when operation switch is turned ON (operation lamp does not light up).		Only LED 1 is lighted. → LED 1, 2 blinks twice, LED 2 blinks once.	• Incorrect wiring between indoor and outdoor units (incorrect polarity of S1, S2, S3) • Remote controller wire short

On the wireless remote controller with conditions above, following phenomena takes place.
- No signals from the remote controller are accepted.
- OPE lamp is blinking.
- The buzzer makes a short ping sound.

Note:
Operation is not possible for about 30 seconds after cancellation of function selection. (Correct operation)

For description of each LED (LED1, 2, 3) provided on the indoor controller, refer to the following table.

LED 1 (power for microcomputer)	Indicates whether control power is supplied. Make sure that this LED is always lit.
LED 2 (power for remote controller)	Indicates whether power is supplied to the remote controller. This LED lights only in the case of the indoor unit which is connected to the outdoor unit refrigerant address “0”.
LED 3 (communication between indoor and outdoor units)	Indicates state of communication between the indoor and outdoor units. Make sure that this LED is always blinking.

AUTO RESTART FUNCTION

Indoor controller board

This model is equipped with the AUTO RESTART FUNCTION.
When the indoor unit is controlled with the remote controller, the operation mode, set temperature, and the fan speed are memorized by the indoor controller board.
The auto restart function sets to work the moment the power has restored after power failure, then, the unit will restart automatically.
Set the AUTO RESTART FUNCTION using the wireless remote controller. (Mode no.1).

7-3. SELF-DIAGNOSIS ACTION TABLE

Note: Refer to the manual of outdoor unit for the details of display such as F, U, and other E.

Error Code	Abnormal point and detection method	Cause	Countermeasure
P1	**Room temperature thermistor (TH1)** ① The unit is in three-minute resume prevention mode if short/open of thermistor is detected. Abnormal if the unit does not reset normally after three minutes. (The unit returns to normal operation, if it has normally reset.) ② Constantly detected during cooling, drying and heating operation Short: 90℃ or more Open: -40℃ or less	① Defective thermistor characteristics ② Contact failure of connector (CN20) on the indoor controller board (Insert failure) ③ Breaking of wire or contact failure of thermistor wiring ④ Defective indoor controller board	①–③ Check resistance value of thermistor. 0℃ ·····15.0kΩ 10℃ ····9.6kΩ 20℃ ····6.3kΩ 30℃ ····4.3kΩ 40℃ ····3.0kΩ If you put force on (draw or bend) the lead wire with measuring resistance value of thermistor breaking of wire or contact failure can be detected. ② Check contact failure of connector (CN20) on the indoor controller board. Refer to 7-5. Turn the power on again and check restart after inserting connector again. ④ Check room temperature display on remote controller. Replace indoor controller board if there is abnormal difference with actual room temperature. Turn the power off, and on again to operate after check.
P2	**Pipe temperature thermistor/Liquid (TH2)** ① The unit is in three-minute resume prevention mode if short/open of thermistor is detected. Abnormal if the unit does not reset normally after three minutes. (The unit returns to normal operation, if it has normally reset.) ② Constantly detected during cooling, drying, and heating (except defrosting) operation. Short: 90℃ or more Open: -40℃ or less	① Defective thermistor characteristics ② Contact failure of connector (CN44) on the indoor controller board (Insert failure) ③ Breaking of wire or contact failure of thermistor wiring ④ Defective refrigerant circuit is causing thermistor temperature of 90℃ or more or -40℃ or less. ⑤ Defective indoor controller board	①–③ Check resistance value of thermistor. For characteristics, refer to (P1) above. ② Check contact failure of connector (CN44) on the indoor controller board. Refer to 7-5. Turn the power on again and check restart after inserting connector again. ④ Check pipe <liquid> temperature with remote controller in test run mode. If pipe <liquid> temperature is extremely low (in cooling mode) or high (in heating mode), refrigerant circuit may have defective. ⑤ Check pipe <liquid> temperature with remote controller in test run mode. If there is extreme difference with actual pipe <liquid> temperature, replace indoor controller board. Turn the power off, and on again to operate after check.
P4 (5701)	**Contact failure of drain float switch (CN4F)** ① Extract when the connector of drain float switch is disconnected. (③ and ④ of connector CN4F is not short-circuited.) ② Constantly detected during operation.	① Contact failure of connector (Insert failure) ② Defective indoor controller board	① Check contact failure of float switch connector. Turn the power on again and check after inserting connector again. ② Operate with connector (CN4F) short-circuited. Replace indoor controller board if abnormality reappears.
P5	**Drain overflow protection operation** ① Suspensive abnormality, if drain float switch is detected to be underwater for 1 minute and 30 seconds continuously with drain pump on. Turn off compressor and indoor fan. ② Drain pump is abnormal if the condition above is detected during suspensive abnormality. ③ Constantly detected during drain pump operation.	① Malfunction of drain pump ② Defective drain Clogged drain pump Clogged drain pipe ③ Defective drain float switch Catch of drain float switch or malfunction of moving parts cause drain float switch to be detected under water (Switch On) ④ Defective indoor-controller board	① Check if drain-up machine works. ② Check drain function. ③ Remove drain float switch connector CN4F and check if it is short (Switch On) with the moving part of float switch UP, or OPEN with the moving part of float switch down. Replace float switch if it is short with the moving part of float switch down. ④ Replace indoor controller board if it is short-circuited between ③-④ of the drain float switch connector CN4F and abnormality reappears. It is not abnormal if there is no problem about the above-mentioned ①~④ Turn the power off, and on again to operate after check.

Error Code	Abnormal point and detection method	Cause	Countermeasure
P6	**Freezing/overheating protection is working** ① Freezing protection (Cooling mode) The unit is in six-minute resume prevention mode if pipe <liquid or condenser/evaporator> temperature stays under -15℃ for three minutes after the compressor started. Abnormal if it stays under -15℃ for three minutes again within 16 minutes after six-minute resume prevention mode. ② Overheating protection (Heating mode) The units is in six-minute resume prevention mode if pipe <Liquid or condenser / evaporator> temperature is detected as over 70℃ after the compressor started. Abnormal if the temperature of over 70℃ is detected again within 10 minutes after six-minute resume prevention mode.	(Cooling or drying mode) ① Clogged filter (reduced airflow) ② Short cycle of air path ③ Low-load (low temperature) operation beyond the tolerance range ④ Defective indoor fan motor • Fan motor is defective. • Indoor controller board is defective. ⑤ Defective outdoor fan control ⑥ Overcharge of refrigerant ⑦ Defective refrigerant circuit (clogs) (Heating mode) ① Clogged filter (reduced airflow) ② Short cycle of air path ③ Over-load (high temperature) operation beyond the tolerance range ④ Defective indoor fan motor • Fan motor is defective. • Indoor controller board is defective. ⑤ Defective outdoor fan control ⑥ Overcharge of refrigerant ⑦ Defective refrigerant circuit (clogs) ⑧ Bypass circuit of outdoor unit is defective.	(Cooling or drying mode) ① Check clogging of the filter. ② Remove shields. ④ Refer to 7-7. DC FAN MOTOR (FAN MOTOR/ INDOOR CONTROLLER BOARD) ⑤ Check outdoor fan motor. ⑥⑦ Check operating condition of refrigerant circuit. (Heating mode) ① Check clogs of the filter. ② Remove shields. ④ Refer to 7-7. DC FAN MOTOR (FAN MOTOR/ INDOOR CONTROLLER BOARD) ⑤ Check outdoor fan motor. ⑥~⑧Check operating condition of refrigerant circuit.
P8	**Pipe temperature** <Cooling mode> Detected as abnormal when the pipe temperature is not in the cooling range 3 minutes after compressor start and 6 minutes after the liquid or condenser/evaporator pipe is out of cooling range. Note 1) It takes at least 9 minutes. to detect. Note 2) Abnormality P8 is not detected in drying mode. Cooling range : -3 deg ≧ (TH-TH1) TH: Lower temperature between: liquid pipe temperature (TH2) and condenser/evaporator temperature (TH5) TH1: Intake temperature <Heating mode> When 10 seconds have passed after the compressor starts operation and the hot adjustment mode has finished, the unit is detected as abnormal when condenser/evaporator pipe temperature is not in heating range within 20 minutes. Note 3) It takes at least 27 minutes to detect abnormality. Note 4) It excludes the period of defrosting (Detection restarts when defrosting mode is over) Heating range : 3 deg ≦ (TH5-TH1)	① Slight temperature difference between indoor room temperature and pipe <liquid or condenser / evaporator> temperature thermistor • Shortage of refrigerant • Disconnected holder of pipe <liquid or condenser / evaporator> thermistor • Defective refrigerant circuit ② Converse connection of extension pipe (on plural units connection) ③ Converse wiring of indoor/ outdoor unit connecting wire (on plural units connection) ④ Defective detection of indoor room temperature and pipe <condenser / evaporator> temperature thermistor ⑤ Stop valve is not opened completely.	①~④ Check pipe <liquid or condenser / evaporator> temperature with room temperature display on remote controller and outdoor controller circuit board. Pipe <liquid or condenser / evaporator> temperature display is indicated by setting SW2 of outdoor controller circuit board. (Conduct temperature check with outdoor controller circuit board after connecting 'A-Control Service Tool(PAC-SK52ST)'.) ②③Check converse connection of extension pipe or converse wiring of indoor/outdoor unit connecting wire.

Error Code	Abnormal point and detection method	Cause	Countermeasure
P9	**Abnormality of pipe temperature thermistor / Condenser-Evaporator (TH5)** ① The unit is in three-minute resume protection mode if short/open of thermistor is detected. Abnormal if the unit does not get back to normal within three minutes. (The unit returns to normal operation, if it has normally reset.) ② Constantly detected during cooling, drying, and heating operation (except defrosting) Short: 90℃ or more Open: -40℃ or less	① Defective thermistor characteristics ② Contact failure of connector (CN44) on the indoor controller board (Insert failure) ③ Breaking of wire or contact failure of thermistor wiring ④ Temperature of thermistor is 90℃ or more or -40℃ or less caused by defective refrigerant circuit. ⑤ Defective indoor controller board	①–③ Check resistance value of thermistor. For characteristics, refer to (P1) above. ② Check contact failure of connector (CN44) on the indoor controller board. Refer to 7-5. Turn the power on and check restart after inserting connector again. ④ Operate in test run mode and check pipe <condenser / evaporator> temperature. If pipe <condenser / evaporator> temperature is extremely low (in cooling mode) or high (in heating mode), refrigerant circuit may have defect. ⑤ When no problems are found in ①-④ above, replace the indoor unit control board.
E0 or E4	**Remote controller transmission error(E0)/signal receiving error(E4)** ① Abnormal if main or sub remote controller can not receive normally any transmission from indoor unit of refrigerant address “0” for three minutes. (Error code : E0) ② Abnormal if sub remote controller could not receive for any signal for two minutes. (Error code: E0) ① Abnormal if indoor controller board can not receive normally any data from remote controller board or from other indoor controller board for three minutes. (Error code: E4) ② Indoor controller board cannot receive any signal from remote controller for two minutes. (Error code: E4)	① Contact failure at transmission wire of remote controller ② All remote controllers are set as “sub” remote controller. In this case, E0 is displayed on remote controller, and E4 is displayed at LED (LED1, LED2) on the outdoor controller circuit board. ③ Mis-wiring of remote controller ④ Defective transmitting receiving circuit of remote controller ⑤ Defective transmitting receiving circuit of indoor controller board of refrigerant address “0” ⑥ Noise has entered into the transmission wire of remote controller.	① Check disconnection or looseness of indoor unit or transmission wire of remote controller. ② Set one of the remote controllers “main” if there is no problem with the action above. ③ Check wiring of remote controller. • Total wiring length: max.500m (Do not use cable × 3 or more) • The number of connecting indoor units: max.16units • The number of connecting remote controller: max.2units When it is not the above-mentioned problem of ①~③ ④ Diagnose remote controllers. a) When “RC OK” is displayed, Remote controllers have no problem. Turn the power off, and on again to check. If abnormality generates again, replace indoor controller board. b) When “RC NG” is displayed, Replace remote controller. c) When “RC E3” is displayed, d) When “ERC 00-06” is displayed, [c),d)→Noise may be causing abnormality.] ∗ If the unit is not normal after replacing indoor controller board in group control, indoor controller board of address “0” may be abnormal.
E3 or E5	**Remote controller transmission error(E3)/signal receiving error(E5)** ① Abnormal if remote controller could not find blank of transmission path for six seconds and could not transmit. (Error code: E3) ② Remote controller receives transmitted data at the same time, compares the data, and when detecting it, judges different data to be abnormal 30 continuous times. (Error code: E3) ① Abnormal if indoor controller board could not find blank of transmission path. (Error code: E5) ② Indoor controller board receives transmitted data at the same time, compares the data,and when detecting it, judges different data to be abnormal 30 continuous times. (Error code: E5)	① Two remote controller are set as “main.” (In case of 2 remote controllers) ② Remote controller is connected with two indoor units or more. ③ Repetition of refrigerant address ④ Defective transmitting receiving circuit of remote controller ⑤ Defective transmitting receiving circuit of indoor controller board ⑥ Noise has entered into transmission wire of remote controller.	① Set a remote controller to main, and the other to sub. ② Remote controller is connected with only one indoor unit. ③ The address changes to a separate setting. ④~⑥ Diagnose remote controller. a) When “RC OK”is displayed, remote controllers have no problem. Turn the power off,and on again to check. When becoming abnormal again, replace indoor controller board. b)When “RC NG”is displayed, replace remote controller. c)When “RC E3”or “ERC 00-66”is displayed, noise may be causing abnormality.

Error Code	Abnormal point and detection method	Cause	Countermeasure
E6	**Indoor/outdoor unit communication error (Signal receiving error)** ① Abnormal if indoor controller board cannot receive any signal normally for six minutes after turning the power on. ② Abnormal if indoor controller board cannot receive any signal normally for three minutes. ③ Consider the unit as abnormal under the following condition: When two or more indoor units are connected to an outdoor unit, indoor controller board cannot receive a signal for three minutes from outdoor controller circuit board, a signal which allows outdoor controller circuit board to transmit signals.	① Contact failure, short circuit or, mis-wiring (converse wiring) of indoor/outdoor unit connecting wire ② Defective transmitting receiving circuit of indoor controller board ③ Defective transmitting receiving circuit of indoor controller board ④ Noise has entered into indoor/ outdoor unit connecting wire.	∗ Check LED display on the outdoor control circuit board. (Connect A-control service tool, PAC-SK52ST.) Refer to Outdoor manual. ① Check disconnection or looseness of indoor/ outdoor unit connecting wire of indoor unit or outdoor unit. Check all the units in case of twin triple indoor unit system. ②-④ Turn the power off, and on again to check. If abnormality generates again, replace indoor controller board or outdoor controller circuit board. ∗ Other indoor controller board may have defect in case of twin triple indoor unit system.
E7	**Indoor/outdoor unit communication error (Transmitting error)** Abnormal if "1" receiving is detected 30 times continuously though indoor controller board has transmitted "0".	① Defective transmitting receiving circuit of indoor controller board ② Noise has entered into power supply. ③ Noise has entered into outdoor control wire.	①-③ Turn the power off, and on again to check. If abnormality generates again, replace indoor controller board.
Fb	**Indoor controller board** Abnormal if data cannot be read normally from the nonvolatile memory of the indoor controller board.	① Defective indoor controller board	① Replace indoor controller board.
E1 or E2	**Remote controller control board** ① Abnormal if data cannot be read normally from the nonvolatile memory of the remote controller control board. (Error code: E1) ② Abnormal if the clock function of remote controller cannot be operated normally. (Error code: E2)	① Defective remote controller	① Replace remote controller.
PA (2500)	**Water leakage** This detection is performed during the operation (stop, heating, fan, or error stop mode etc.) other than cooling and dry. ① When a) and b) are found, water leakage occurs. a) Pipe <liquid> temperature - inlet temperature < -10˚C for 30 minutes b) When drain float switch is detected to be soaked in the water for 15 minutes or more. * When drain float switch is detected to be NOT soaked in the water, each counting of a) and b) is cleared. **<u>*When this error is detected, the error will not be reset until the main power is reset.</u>**	① Mis-piping of extension pipes (When connected with multiple units) ② Mis-wiring of indoor/outdoor unit connecting wire (When connected with multiple units) ③ Detection failure of the indoor unit inlet/ pipe <liquid> thermistor ④ Drain pump failure ⑤ Drainage failure · Clogged drain pump · Clogged drain pipe ⑥ Drain float switch failure · Drain float switch is detected to be soaked in the water (ON status) due to the operation failure of the moving parts. · Contact failure of drain float switch connector (Loose connector)	①Check the extension pipes for mis-piping. ②Check the Indoor/outdoor unit connecting wire for mis-wiring. ③Check room temperature display on remote controller and indoor pipe <liquid> temperature. (Refer to the countermeasure on P2.) ④Check if drain-up machine works. ⑤ Check drain function. ⑥Check drain float switch. (Refer to the countermeasure on P4 and P5.)

7-4. TROUBLESHOOTING BY INFERIOR PHENOMENA

Note: Refer to the manual of outdoor unit for the detail of remote controller.

Phenomena	Cause	Countermeasure
(1)LED2 on indoor controller board is off.	• When LED1 on indoor controller board is also off. ① Power supply of rated voltage is not supplied to outdoor unit.	① Check the voltage of outdoor power supply terminal block (L, N) or (L_3, N). • When AC 220~240V is not detected. Check the power wiring to outdoor unit and the breaker. • When AC 220~240V is detected. —Check ② (below).
	② Defective outdoor controller circuit board	② Check the voltage between outdoor terminal block S1 and S2. • When AC 220~240V is not detected. Check the fuse on outdoor controller circuit board. Check the wiring connection. • When AC 220~240V is detected. —Check ③ (below).
	③ Power supply of 220~240V is not supplied to indoor unit.	③ Check the voltage between indoor terminal block S1 and S2. • When AC 220~240V is not detected. Check indoor/outdoor unit connecting wire for mis-wiring. • When AC 220~240V is detected. —Check ④ (below).
	④ Defective indoor controller board	④ Check the fuse on indoor controller board. Check the wiring connection. If no problem are found, indoor controller board is defective.
(2)LED2 on indoor controller board is blinking.	• When LED1 on indoor controller board is also blinking. Connection failure of indoor/outdoor unit connecting wire • When LED1 is lit.	Check indoor/outdoor unit connecting wire for connection failure.
	① Mis-wiring of remote controller wires Under twin triple indoor unit system, 2 or more indoor units are wired together.	① Check the connection of remote controller wires in case of twin triple indoor unit system. When 2 or more indoor units are wired in one refrigerant system, connect remote controller wires to one of those units.
	② Refrigerant address for outdoor unit is wrong or not set. Under grouping control system, there are some units whose refrigerant address is 0.	② Check the setting of refrigerant address in case of grouping control system. If there are some units whose refrigerant addresses are 0 in one group, set one of the units to 0 using SW1 (3-6) on outdoor controller circuit board.
	③ Short-cut of remote controller wires ④ Defective remote controller	③④ Remove remote controller wires and check LED2 on indoor controller board. • When LED2 is blinking, check the short-cut of remote controller wires. • When LED2 is lit, connect remote controller wires again and: if LED2 is blinking, remote controller is defective; if LED2 is lit, connection failure of remote controller terminal block etc. has returned to normal.

7-5. TEST POINT DIAGRAM

7-5-1. Indoor controller board

SEZ-M25DA(L)
SEZ-M35DA(L)
SEZ-M50DA(L)
SEZ-M60DA(L)
SEZ-M71DA(L)

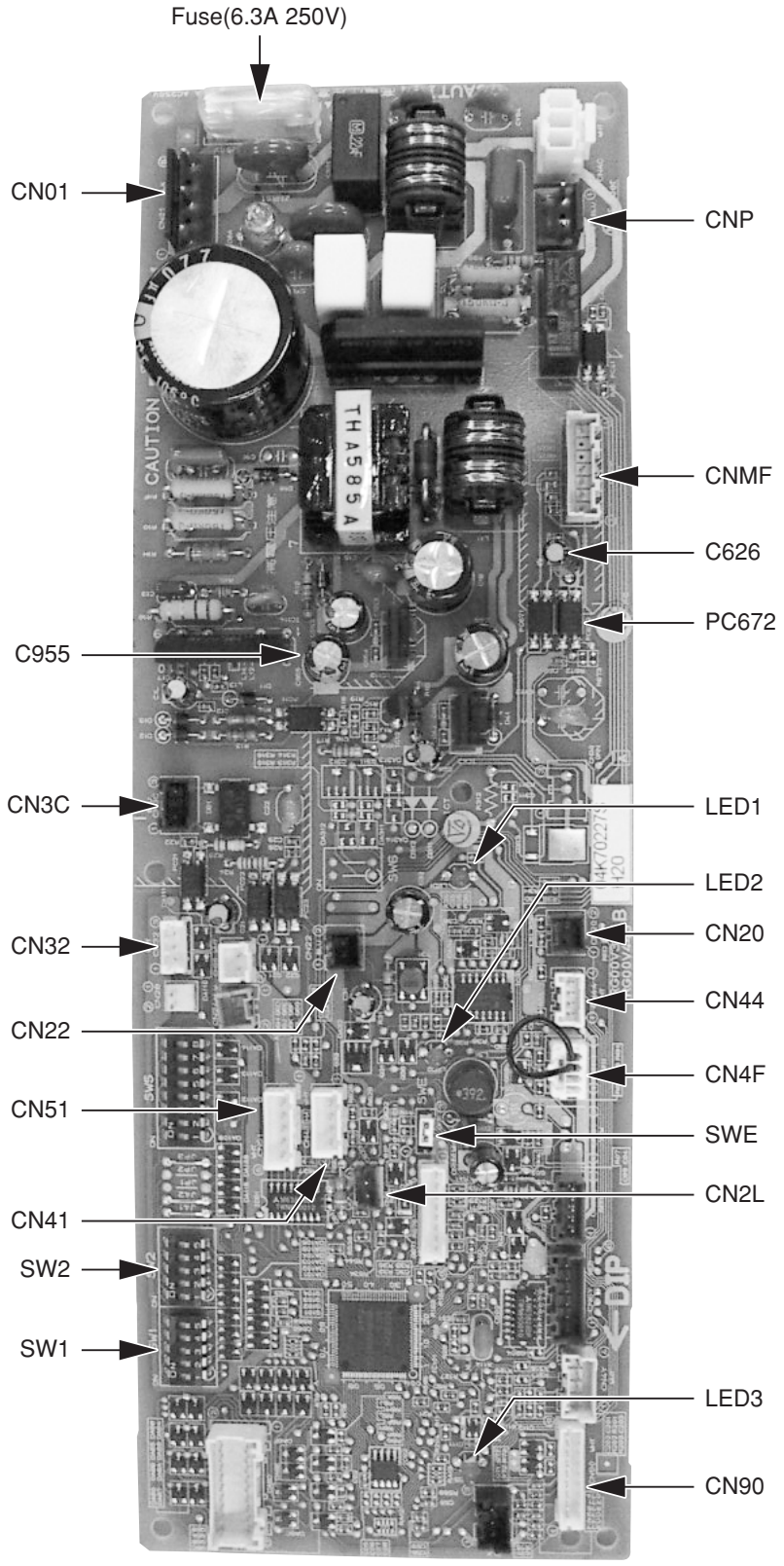

CN01 Power supply voltage (220 - 240VAC)

SWE Emergency operation

SW1 Model selection

SW2 Capacity setting

CN32 Remote start/stop adapter

CN22 For MA remote controller cable connection
(10 - 13 VDC (Between 1 and 3.))

CN51 Centralized control

CN41 JAMA standard HA terminal A

CN44 Thermistor
(liquid/condenser/evaporator temperature)

CN4F Float thermistor

CN20 Thermistor (Inlet temperature)

CN3C Indoor-outdoor transmission
(0 - 24VDC)

CNMF Fan motor output
1 - 4: 310 - 340 VDC
5 - 4: 15 VDC
6 - 4: 0 - 6.5 VDC
7 - 4: Stop 0 or 15 VDC
Run 7.5 VDC
(0 - 15 pulse)

CNP Drain-up mechanism output (200VAC)

CN2L LOSSNAY

CN90 Wireless remote controller

(*1)

V_{FG} Voltage on the (-) side of PC672 and C955
(Same with the voltage between 7 (+) and 4 (-) of CNMF)

V_{CC} Voltage between the C955 pins 15 VDC
(Same with the voltage between 5 (+) and 4 (-) of CNMF)

V_{sp} Voltage between the C626 pins
0VDC (with the fan stopped)
1 - 6.5VDC (with the fan in operation)
(Same with the voltage between 6 (+) and 4 (-) of CNMF)

7-6. TROUBLE CRITERION OF MAIN PARTS

SEZ-M25DA(L)
SEZ-M35DA(L)
SEZ-M50DA(L)
SEZ-M60DA(L)
SEZ-M71DA(L)

<table>
<tr><th>Part name</th><th>Check method and criterion</th></tr>
<tr><td>Room temperature thermistor
(TH1)</td><td rowspan="3">Measure the resistance with a tester.
(Part temperature 10°C ~ 30°C)
<table><tr><th>Normal</th><th>Abnormal</th></tr><tr><td>8kΩ~20kΩ</td><td>Opened or short-circuited</td></tr></table></td></tr>
<tr><td>Pipe temperature thermistor/liquid
(TH2)</td></tr>
<tr><td>Condenser/evaporator temperature thermistor
(TH5)</td></tr>
<tr><td>Wiring diagram</td><td> 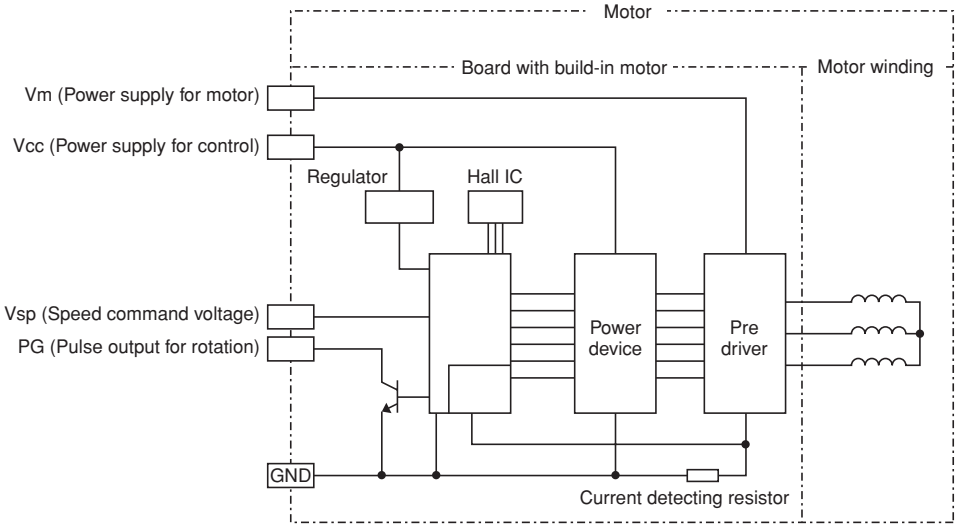
</td></tr>
</table>

7-7. DC FAN MOTOR (FAN MOTOR/ INDOOR CONTROLLER BOARD)

Check method of DC fan motor (fan motor / indoor controller circuit board)

① Notes

· High voltage is applied to the connecter (CNMF) for the fan motor. Give attention to the service.

· Do not pull out the connector (CNMF) for the motor with the power supply on.
(It causes trouble of the indoor controller circuit board and fan motor.)

② Self check

Symptom : The indoor fan cannot turn around.

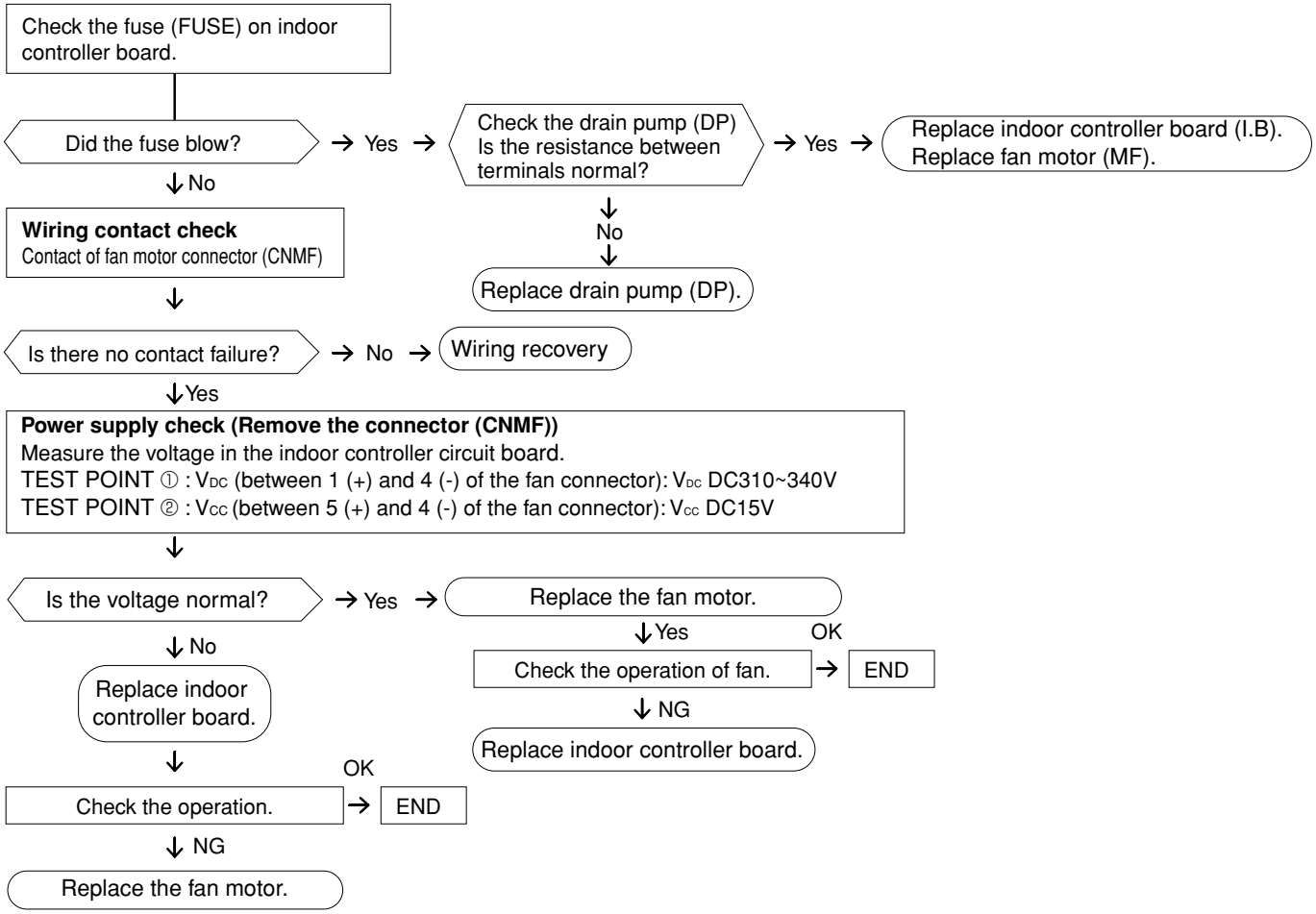

8 DISASSEMBLY PROCEDURE

Exercise caution when removing heavy parts.

SEZ-M25DA(L)
SEZ-M35DA(L)
SEZ-M50DA(L)
SEZ-M60DA(L)
SEZ-M71DA(L)

1. Control box

1. Removing the control box cover
(1) Remove the two fixing screws on the cover (A) to remove it.

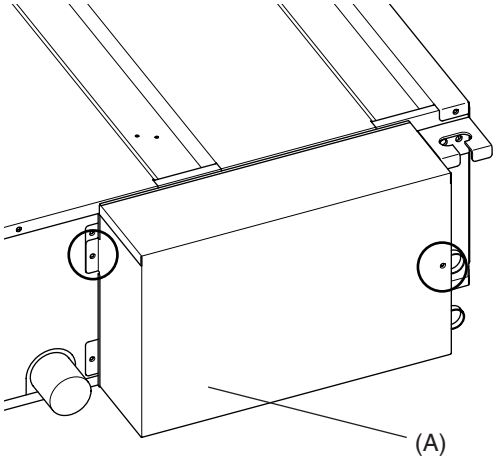

Fig. 1

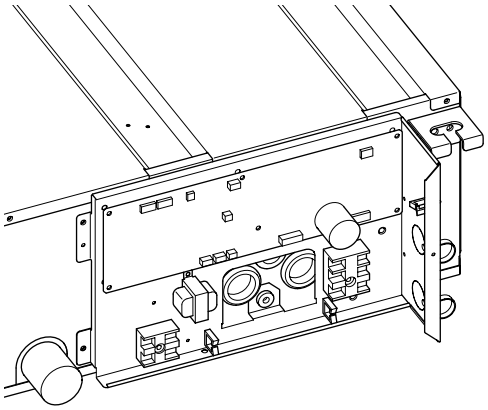

Fig. 2

2. Thermistor (Intake air)

1. Remove the control box cover according to the procedure in section **1.**
(1) Pull out the thermistor holder (B) and thermistor (C) on the control box.

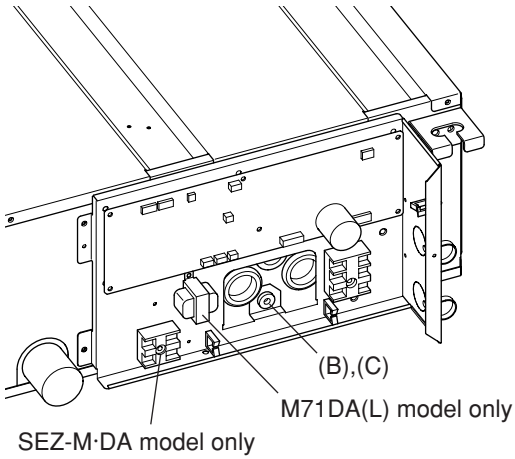

Fig. 3

Exercise caution when removing heavy parts.

3. Drainpan

1. Removing the filter and the bottom plate
(1) Push up the tab on the filter, and pull out the filter in the direction of the arrow ①.
(2) Remove the fixing screws on the bottom plate (D), (E) to remove it.

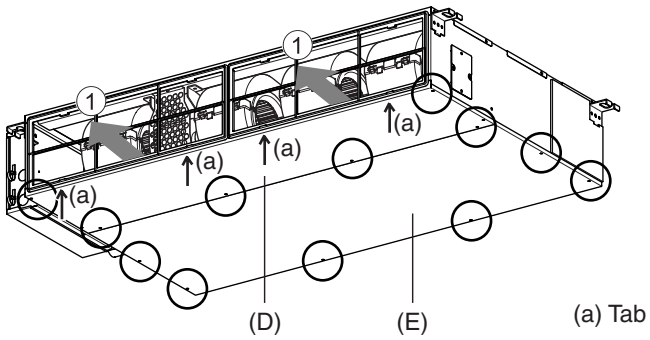

Fig. 4

2. Removing the drainpan
(1) Pull out the drain pan in the direction of the arrow ①.

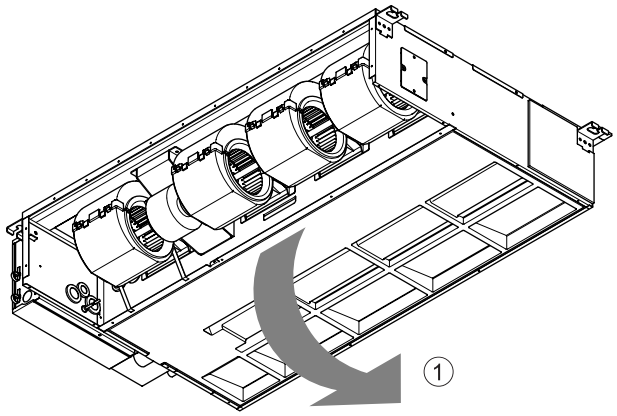

Fig. 5

Note
- **Drain the water out of the drain pan before removing it.**
- **To avoid dew condensation, use insulated screws in the places marked with circles in Fig. 6.**

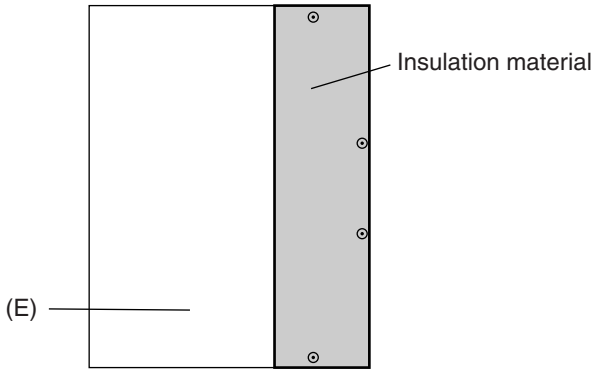

Fig. 6

Exercise caution when removing heavy parts.

4. Thermistor (Condenser / evaporator) (Liquid pipe)

1. Remove the drain pan according to the procedure in section **3.**
2. Removing the Heat exchanger cover
(1) Remove the four fixing screws on the heat exchanger cover (F) to remove it.

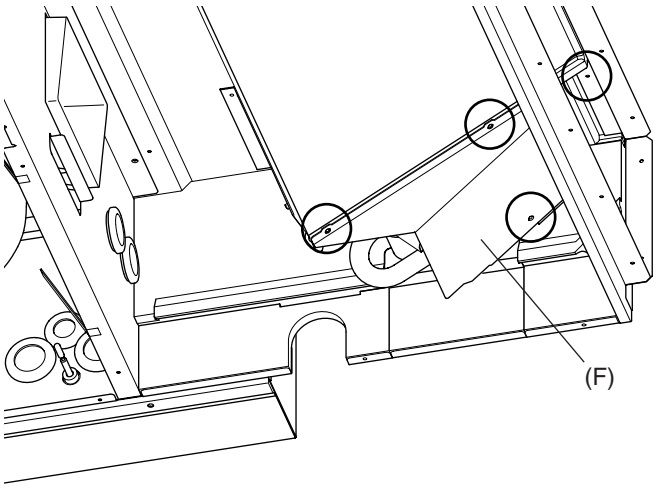

Fig. 7

3. Removing the thermistor
(1) Remove the thermistor (G) from the thermistor holder (H) on the copper tube.

Thermistor size
Liquid pipe: ø8mm
Condenser / evaporator: ø6mm

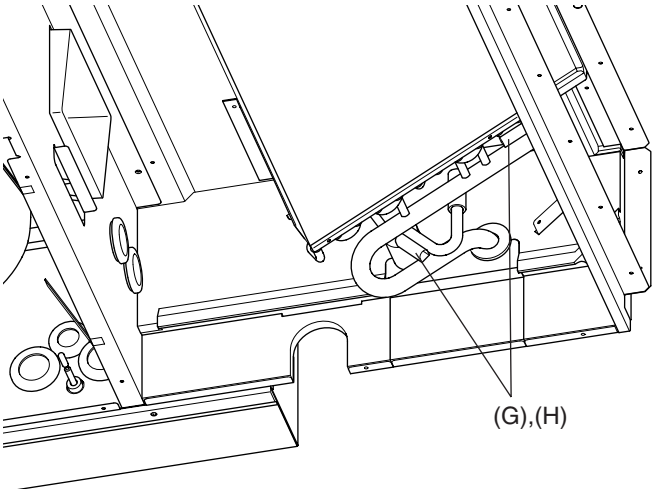

Fig. 8

Exercise caution when removing heavy parts.

5. Fan and fan motor

1. Removing the filter and the bottom plate
(1) Push down the tab on the filter, and pull out the filter in the direction of the arrow ①.
(2) Remove the fixing screws on the bottom plate (J) to remove it.

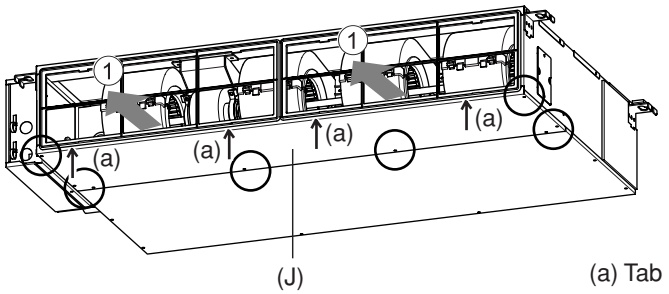

Fig. 9

2. Removing the fan casing (bottom half)
(1) Squeeze the tabs on the fan casing to remove it in the direction of arrow ②.

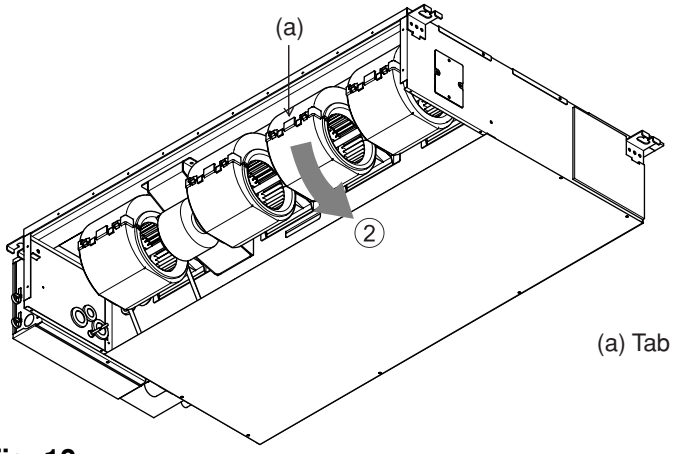

Fig. 10

3. Removing the motor cable
(1) Remove the motor cable threw the rubber bush.

4. Removing the fan motor and the Sirocco fan
(1) Remove the two motor fixing screws to remove the motor and the Sirocco fan in the direction of arrow ③.

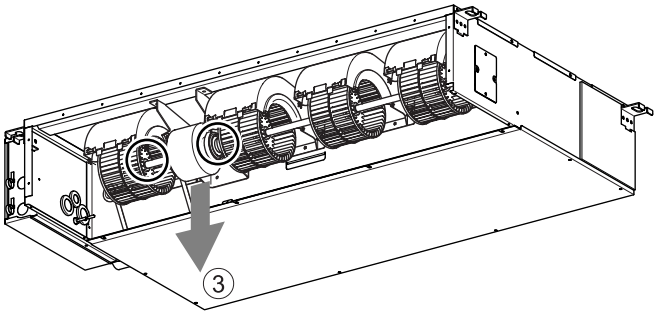

Fig. 11

(2) Remove the four fan case fixing screws to take the top half of the fan casing off.

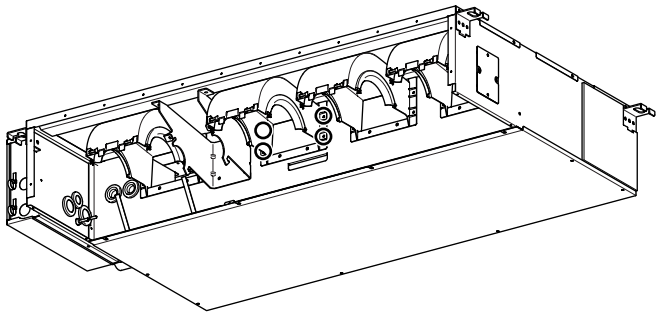

Fig. 12

Exercise caution when removing heavy parts.

6. Bearing [M50·60·71DA(L) model only]

1. Removing the bearing

(1) Remove the two fixing screws on the bearing cover (K) to remove it.

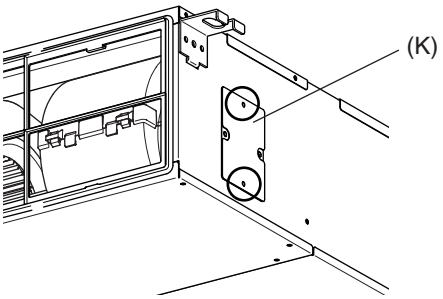

Fig. 13

(2) Remove the two bearing retainer screws to remove the bearing.

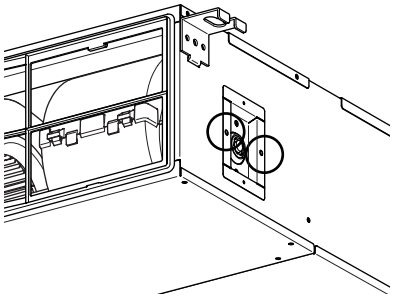

Fig. 14

7. Heat exchanger

1. Remove the drain pan according to the procedure in section **3.**
2. Remove the heat exchanger cover according to the procedure in section **4.** 2.
3. Removing the cover

(1) Remove the two fixing screws on the cover (L) to remove it.

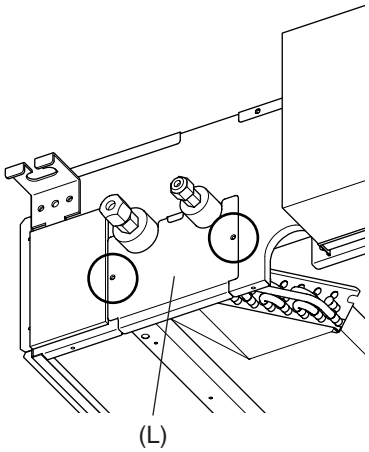

Fig. 15

4. Removing the Heat exchanger

(1) Remove the fixing screws on the heat exchanger (M) to remove it.

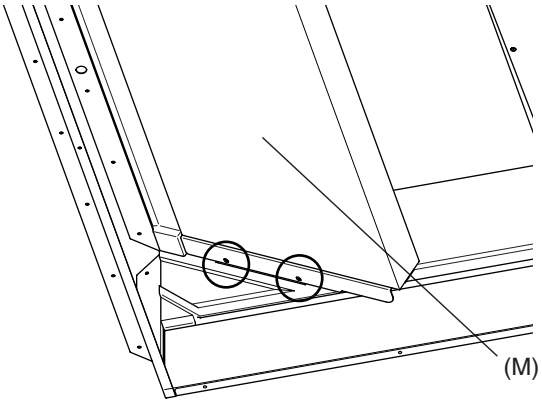

Fig. 16

MITSUBISHI ELECTRIC CORPORATION

www.MitsubishiElectric.com

HWE17040

New publication effective Nov. 2017
Specifications subject to change without notice